QVANTUM

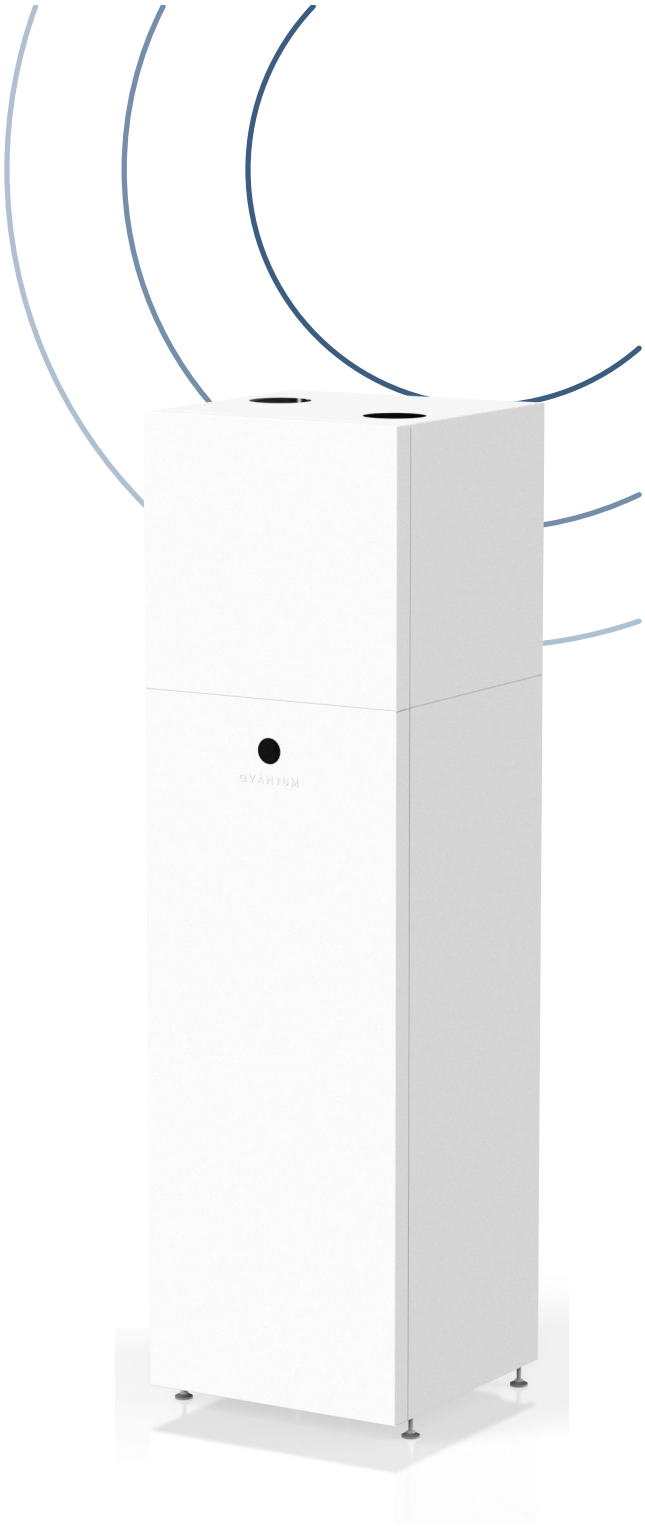

Qvantum QE

Exhaust air heat pump

Installation and user handbook

QCH EN 2614-B
1014076

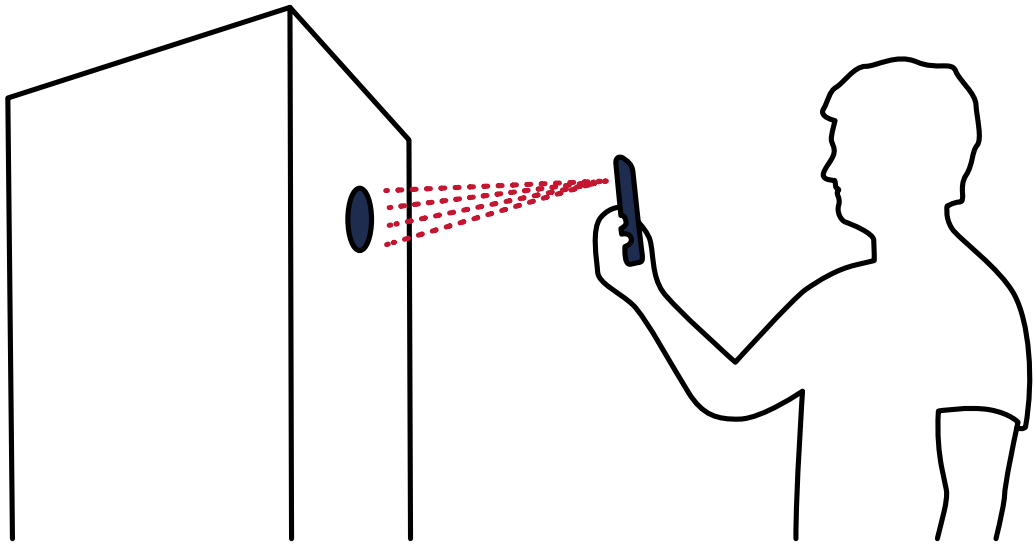

QVANTUM APP

Have all the controls for your heat pump, in the palm of your hand.

The Qvantum app is a necessary companion for installing and setting up your Q unit. The app is available on both App Store and Google Play.

By scanning the QR code on your Q unit, you can connect to the unit through Wi-Fi or Bluetooth. During commissioning, you will be guided through the entire installation process.

Once the connection is established, you can use the app to access all relevant information and settings for your product.

CONTENTS

1 Important information....4
General....4
Safety....4
Network interfaces and services....5
Symbols....5
Product labels....5
Serial number and QR code....5
Product registration....6
Environmental information....6

2 Before installing....7
Transport....7
Installation area....7
Additional components....8
Front cover removal....8

3 Components....10
Overview....10
Hydronic unit connections....10
Compressor unit....10
Electrical box....11

4 Pipe installation....12
Pipe installation, general....12
Pipe connections....13
Installation....13

5 Ventilation installation....16
Ventilation installation, general....16
Measurements and dimensions....16
Outside air mixture....16

6 Electrical installation....18
Electrical installation, general....18
Electrical connections....19
Router installation....22
Safety temperature limiter....23
Settings....23

7 Commissioning....24
Qvantum app....24
Preparations....24
Filling....25
Venting....26
First start-up....26
Add additional devices....28

8 User interface....29
Introduction....29
Using the display unit....29
Indications....29
Indoor climate....30
Domestic hot water....31
Comfort and scheduling....31
Settings....31

9 Service....35
General....35
Remote service....35
Maintenance....35
Service actions....37

10 Troubleshooting....40
Before troubleshooting....40
Low room temperature during heating....40
High room temperature during heating....40
Low room temperature during cooling....40
Insufficient hot water production....40
High room temperature during cooling....41
Insufficient ventilation....41
Abnormal ventilation noise....41
Low system pressure....41
Compressor not starting....41

11 Technical specifications....42
Dimensions and installation coordinates....42
Technical data....43
Energy labelling....45

Index....48

1 IMPORTANT INFORMATION

General

WARNING

Read this manual before starting the unit for the first time.

It is the owner of the product that is responsible for the system. If you suspect that the product is defective, contact your dealer.

TIP

For the latest available product documentation, visit qvantum.com.

Safety

This appliance can be used by children from 8 years and above and people with reduced physical, sensory or mental capabilities or lack of experience and knowledge if they have been given supervision or instruction concerning the use of the appliance in a safe way and understand the hazards involved. Children must not play with the appliance. Cleaning and maintenance must not be performed by children unless they are older than 8 and supervised.

The manual must be available for people who install, support or use the product.

Work must follow the instructions described in this manual. Companies and persons installing and maintaining the product must have the required certificates, licenses and qualifications.

The work must comply with current regulations and practices and be carried out professionally.

When powering up the product, there must be no frozen water in the system.

Wiring and electrical installation must be performed in compliance with national regulations.

It must be possible to safely disconnect the electrical power supply to the unit. Install the power supply with an isolator switch and size the cable area based on the fuse rating that is being used.

Operating pressures

- Distribution system
  - Min (MPa/bar): 0.05/0.5
  - Max (MPa/bar): 0.3/3
- Domestic hot water
  - Min (MPa/bar): 0.05/0.5
  - Max (MPa/bar): 0.9/9

Operating temperatures

- Distribution system
  - Min (°C): 7
  - Max (°C)[1]: 80
- Domestic hot water
  - Min (°C): 1
  - Max (°C)[1]: 60
- Ambient
  - Min (°C): 5
  - Max (°C): 35

[1] With compressor and immersion heater.

Water quality

The product has a plate heat exchanger that should not be exposed to corrosive water. To avoid corrosion, the water must meet the following quality requirements.

ELEMENT/COMPOUND/ PROPERTY		LIMIT
pH	-	7.5 – 9.0
Conductivity	µS/cm	< 500
Total hardness	°dH	4.5 – 8.5
Free chlorine	ppm	< 1.0
Ammonia (NH_3)	ppm	< 0.5
Sulphate (SO_4^{2-})	ppm	< 100
Hydrogen carbonate (HCO_3^-)	ppm	60 – 200
(HCO_3^-) / (SO_4^{2-})	-	> 1.5
(Ca + Mg) / (HCO_3^-)	-	> 0.5
Chloride (Cl^-)		See diagram.

The allowed chloride level depends on the pH of the water and the maximum temperature the plate heat exchanger is exposed to.

Do not expose the plate heat exchanger to chloride levels in the shaded area of the diagram. This can cause crevice corrosion.

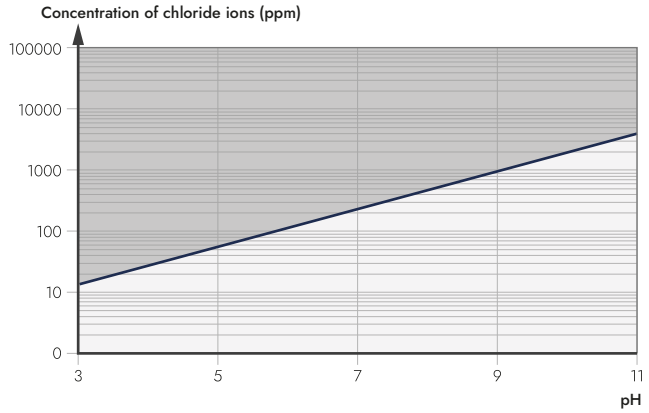

Network interfaces and services

The following network interfaces and services can be exposed to the internet:

- Cloud connection (AWS IoT Hub) over Wi-Fi
- Bluetooth.

Symbols

The manual contains the following symbols

WARNING

This symbol describes information that is of great danger to people or equipment.

CAUTION

This symbol describes information that could cause danger to people or equipment.

NOTE

This symbol describes information that is crucial when installing or servicing the heat pump.

TIP

This symbol describes information that can be helpful when installing or servicing the heat pump.

Product labels

These labels are found on the product.

CE	CE marking indicates that a product has been assessed by the manufacturer and deemed to meet EU safety, health and environmental protection requirements.
IP21	Protection classification against water and dust in the electrical enclosure.

Serial number and QR code

The serial number and QR code of the QE are visible at the following locations.

- Electrical box cover
- Packaging
- User interface.

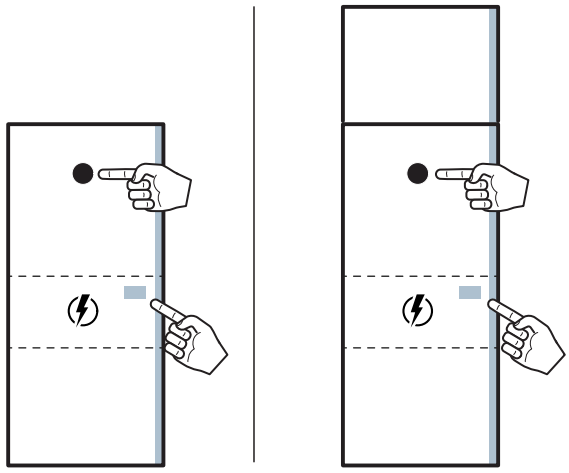

Product registration

The product must be registered for the warranty to take effect. The product can be registered no more than 12 months after the delivery date from the factory and no more than one month after the installation. If the product is registered at a later stage, the warranty period will be affected.

The product registration is done as part of the start-up guide in the Qvantum app.

Environmental information

F-gas regulation (EU) No. 2024/573

This product contains a fluorinated greenhouse gas that is covered by the Kyoto protocol.

The equipment contains R513A, a fluorinated greenhouse gas with a global warming potential (GWP) of 629. Do not release R513A into the atmosphere.

Recycling

At the end of the electrical products useful life, is must not be disposed of with household waste.

Recycle at waste facility. Check with your local authority or retailer for local recycling regulations.

Air filters are consumables.

Packaging content

The product packaging contains the following materials.

MATERIAL	WEIGHT
Paper	3.7 kg
Plastic	0.47 kg
Wood (pallet)	6 kg
Steel (reinforcement on pallet)	0.5 kg

2 BEFORE INSTALLING

Transport

Transport the product in an upright position. Ensure that the product is adequately secured so it does not fall down during transit.

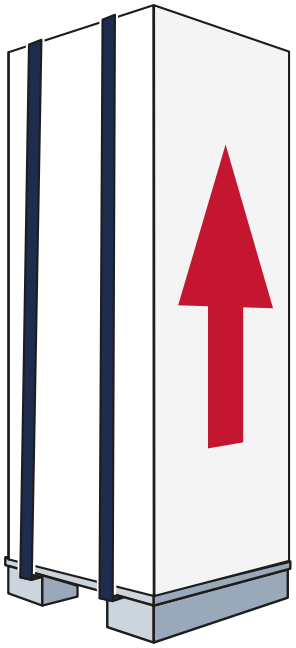

At arrival, ensure that the product was not damaged during transport and that the tilt guard has not been triggered.

If the product must be tilted after arrival, always tilt it backwards.

If using a trolley or hand truck when moving the product, always have the product standing on the pallet.

NOTE

The tilt guard ensures that the product is not exposed to inappropriate handling during transit. Once the product has been delivered, the tilt guard might be triggered when the product is moved to the installation area.

Installation area

Ensure that the following installation area requirements are fulfilled.

- The foundation withstands the weight of the product when it is filled.
- As the product may release water, the installation area should be equipped with a floor drain or equivalent water drainage solution.
- The area always has a temperature between 10 °C and 30 °C.
- The area is not noise sensitive. The product is preferably placed against an outer wall.
- If the product is placed next to a noise sensitive area, for example a bedroom, ensure that the adjacent wall is soundproofed.

TIP

The feet under the product must be adjusted to ensure that the product is stable and positioned in level. Use a wrench or an open end spanner (size 17) to adjust the feet.

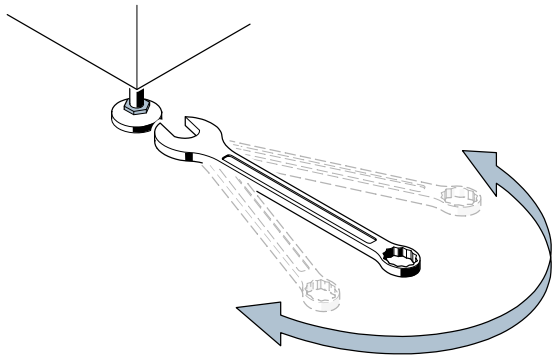

Setup dimensions

CAUTION

A minimum of 800 mm free space must be available in front of the product.

TIP

For ease of ventilation installation, it is recommended that 300 mm of free space is available above the product.

The unit must not be placed in direct connection to the background wall or in connection to adjacent interior details as it can create unwanted noise. A minimum of 10 mm of clear space should be left behind and next to the unit.

NOTE

Pipework behind the product shall not touch the wall.

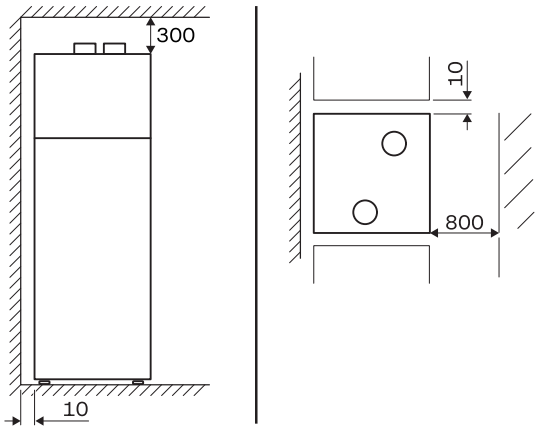

Additional components

Supplied components

The supplied components package contains the following items:

#	COMPONENT
1	Indoor temperature sensor
1	Outdoor temperature sensor
1	Supply line temperature sensor
1	3-pin busbar
1	Distribution system refill hose
2	Filterball valve (internal thread)
1	Vent hose
1	Snap-on ferrite core
2	Air filters
1	Router

Accessories

The product can be complemented with the following accessories.

ACCESSORY	PART NUMBER
Extension base	9330549
Top cabinet	1003365
QT - Room display	1011304
QS - Supply air module	9330042

Front cover removal

The front covers of the unit is mounted with brackets and clips that are on the frame of the product. The top of the covers rest on the brackets and the bottom of the covers are held in place with the clips.

CAUTION

The cover of the heat pump unit must be removed before removing the hydronic unit cover.

NOTE

Be careul when removing the hydronic unit cover to avoid causing damage to the ethernet cable and display unit.

1. Carefully pull the bottom of the cover from the heat pump unit.
2. Lift the cover upwards.
3. Remove the cover from the unit.

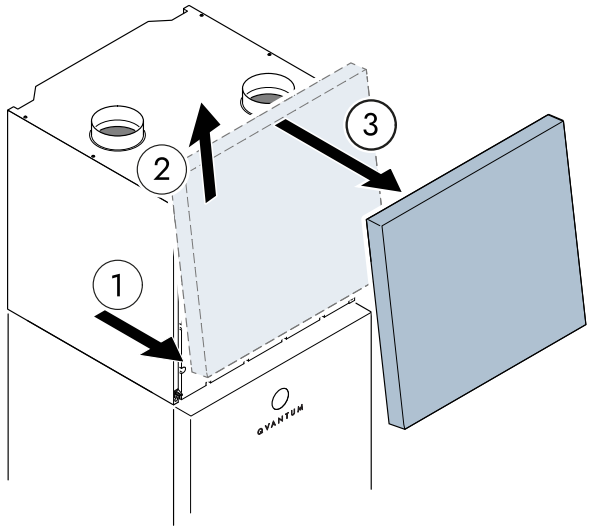

4. Carefully pull the bottom of the cover from the hydronic unit.
5. Lift the cover upwards.
6. Remove the cover from the unit.

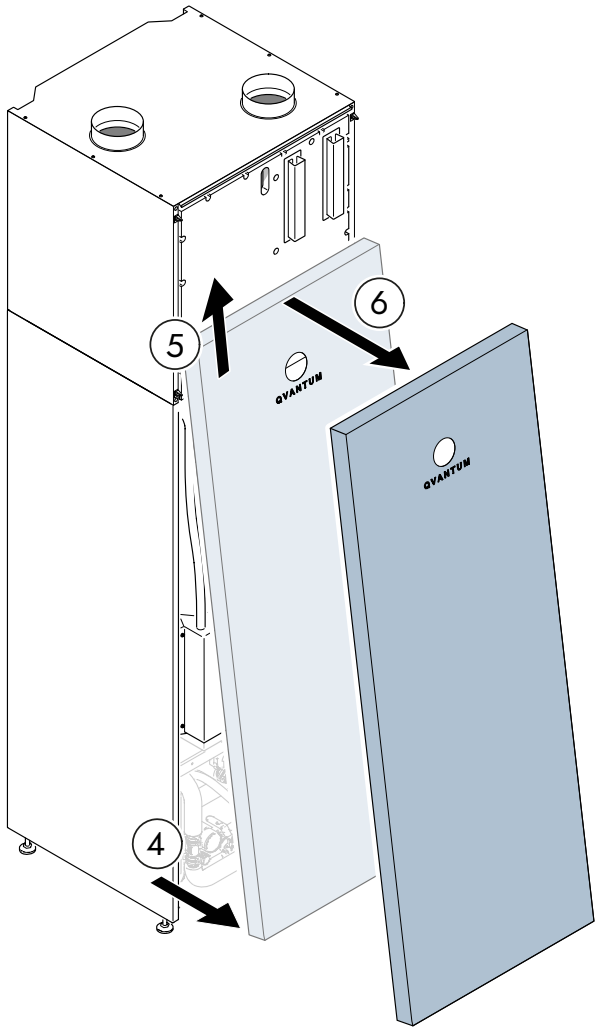

Disconnecting the display unit

The display unit is connected with a power and communication cable on the front cover. Remove the cable before moving the front cover too far away from the hydronic unit.

For most installation and servicing tasks, disconnecting the display unit is not necessary. The display cable is long enough for placing the front cover in close proximity to the unit.

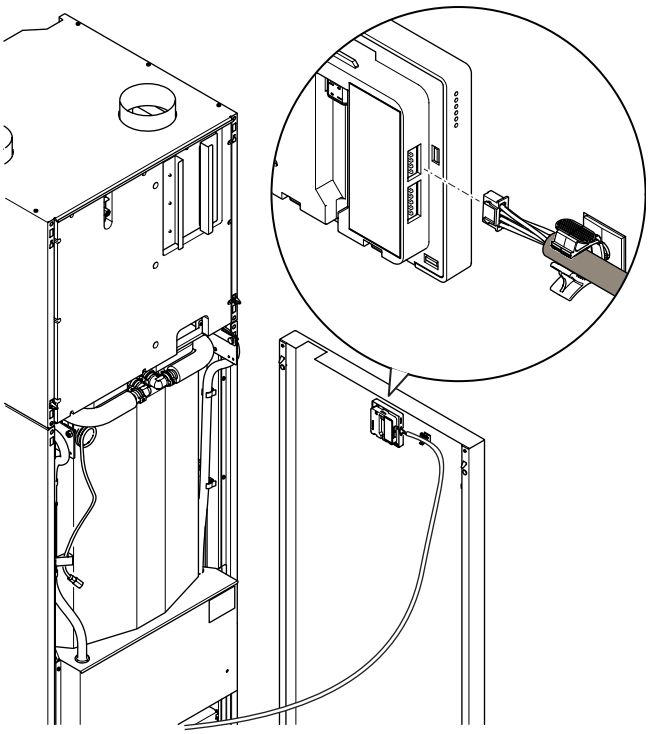

3 COMPONENTS

Overview

The Qvantum QE consists of two main units; one hydronic unit and one compressor unit.

The hydronic unit is connected to the facility's piping system through connections that are in the bottom of the hydronic unit. The hydronic unit also contains the heat pump's electrical connections and the user interface.

The compressor unit it connected to the facility's ventilation system through the ventilation connections on the top of the unit.

Hydronic unit connections

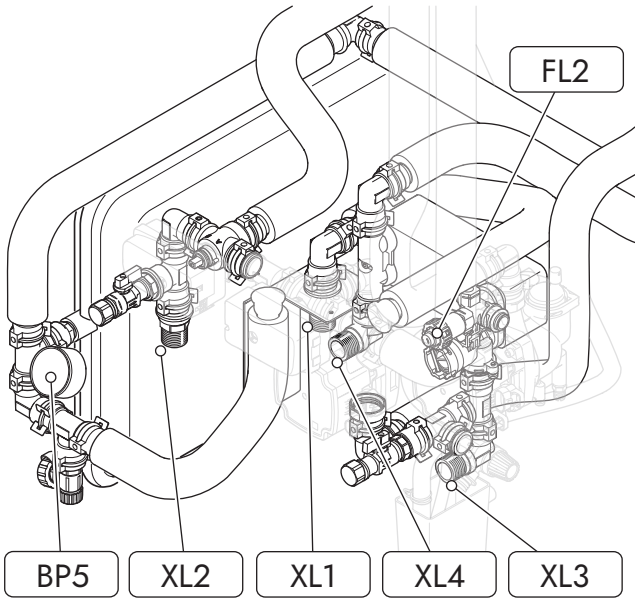

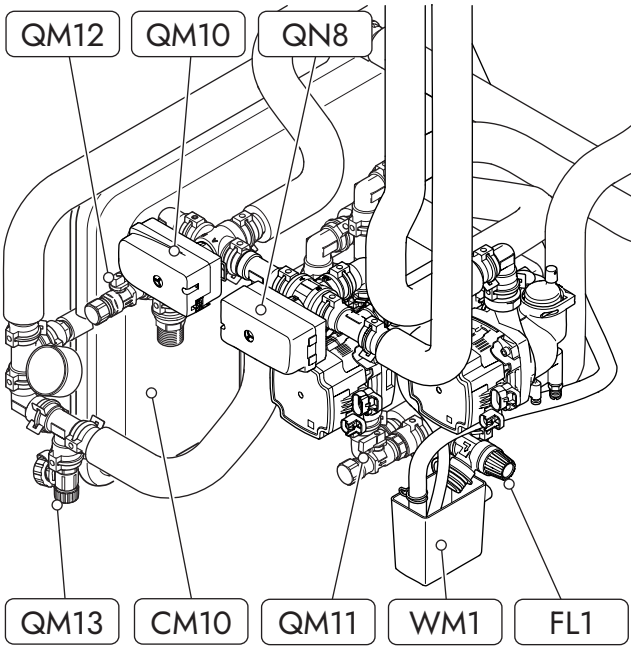

ID[1]	COMPONENT
BP5	Pressure gauge
CM10	Expansion vessel
FL1	Safety valve, hot water circuit
FL2	Safety valve, distribution system
QM10	Diverting valve
QM11	Primary refill valve, distribution system
QM12	Secondary refill valve, distribution system
QM13	Drain valve, accumulator tank
QN8	Mixing valve
XL1	Connection distribution system, supply line
XL2	Connection distribution system, return line
XL3	Connection, cold water
XL4	Connection, hot water
WM1	Overflow cup

1 Component designations in accordance with IEC 81346.

Compressor unit

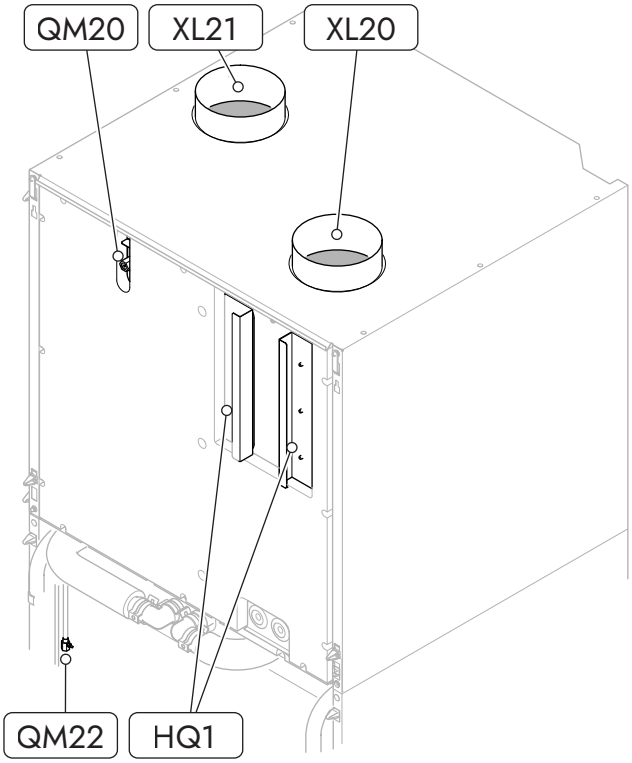

ID[1]	COMPONENT
HQ1	Filters
QM20	Bleed valve, distribution system
QM22	Bleed valve, accumulator tank
XL20	Connection, exhaust air
XL21	Connection, extract air

1 Component designations in accordance with IEC 81346.

Electrical box

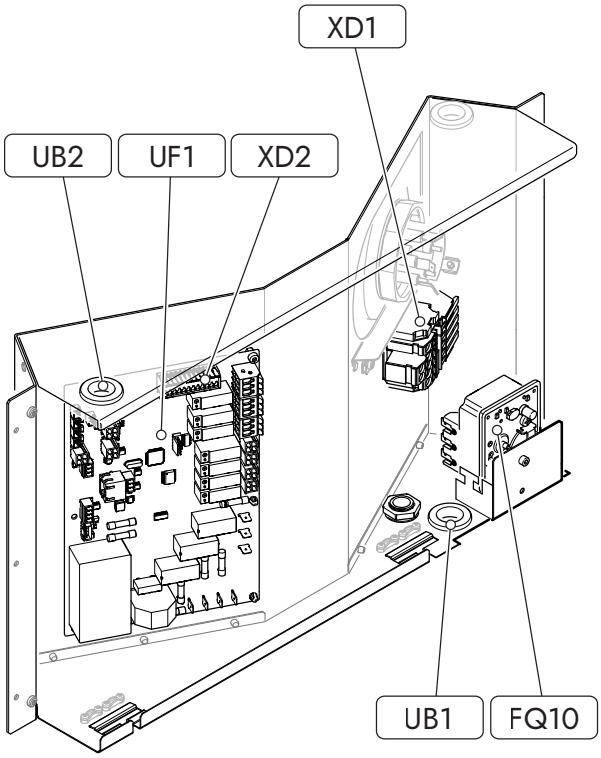

ID[1]	COMPONENT
FQ10	Safety temperature limiter (STL)
UB1	Cable entry, power supply
UB2	Cable entry, communication and sensors
UF1	Main board
XD1	Terminal block, power supply
XD2	Terminal block, communication and sensors

1 Component designations in accordance with IEC 81346.

4 PIPE INSTALLATION

Pipe installation, general

NOTE

The pipe installations must be performed in accordance with applicable regulations.

All pipe connections are at the bottom of the product. The radiator system must be correctly adjusted so that the house has a balanced heat transfer.

For best performance and operational reliability, the maximum allowed supply line temperature should not exceed 55 °C.

CAUTION

The temperature settings must be adjusted to accommodate the highest allowed supply line temperature of the distribution system. Not setting the correct temperatures can cause serious structural damage.

CAUTION

To avoid damage to components, ensure that the piping system is flushed out before connecting the heat pump.

CAUTION

If the unit is installed where a private well is used it may be necessary to add an extra water filter.

Operating principle

The room tempered exhaust air (1) passes through a filter to the heat pumps evaporator (2). As the air passes through the evaporator, the refrigerant evaporates due to its low boiling point. This causes the air to release energy into the refrigerant. The refrigerant is then compressed in the compressor (3) and the temperature rises considerably. The discharge is led to the condenser (4), where the refrigerant releases its energy into the water of the heating system, transforming the refrigerant from gas to liquid.

The refrigerant then passes to the expansion valve (5) where the pressure and temperature are reduced. The circuit is now complete, and the refrigerant passes back through the evaporator.

The heat pump distributes the heat to heating or domestic hot water via a diverting valve (6). If the compressor can not cover the demand in cold weather conditions, the mixing valve (7) starts to open, allowing additional heat stored in the accumulator tank to be distributed. At this stage the temperature in the tank will be maintained by the built in immersion heater (8) which is switched on in stages as needed.

Hot water circulation (9) is installed and controlled outside of the unit.

NOTE

The following image is a principle picture. The locations of components do not correspond with the actual product.

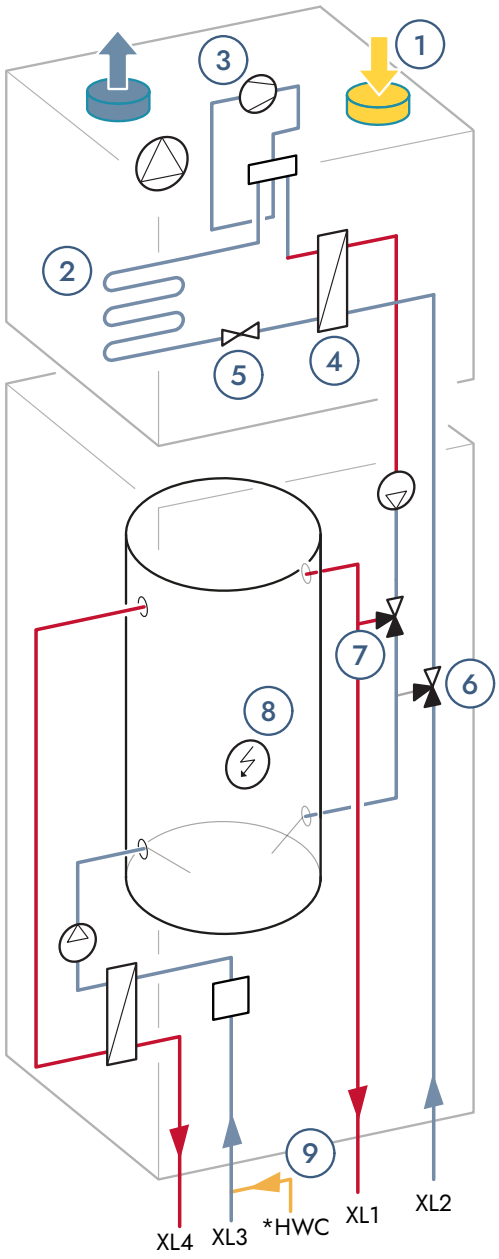

System volume

The expansion vessel (CM10) in the unit has a volume of 12 litres. The vessel has a pre-pressure of 1 bar. It is recommended that the height difference between the expansion vessel and the highest installed radiator does not exceed 7 meters ("Max" in the following image).

The height difference is measured between the center of the expansion vessel and the top-level radiator.

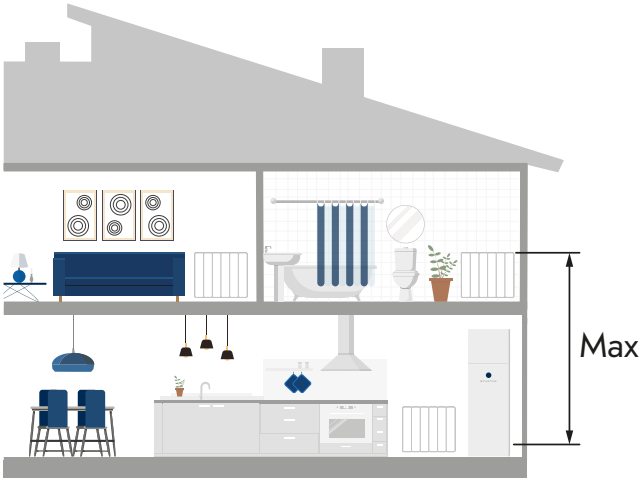

NOTE

If the pre-pressure is too low, the valve on the expansion vessel can be used for refilling of nitrogen. Changing the pre-pressure can affect the expansion vessel's capacity for accommodating the expansion of the water.

At the default pre-pressure of 1 bar, the maximum system volume is 230 litres.

Pipe connections

Measurements and dimensions

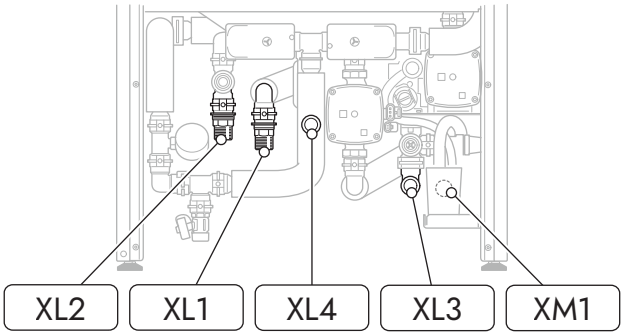

Connection dimensions

CONNECTION	DIMENSION
XL1, distribution system supply	DN20, external thread
XL2, distribution system return	DN20, external thread
XL3, cold water	DN20, external thread
XL4, hot water	DN20, external thread
XM1, drain outlet	Ø32 mm

Connection coordinates

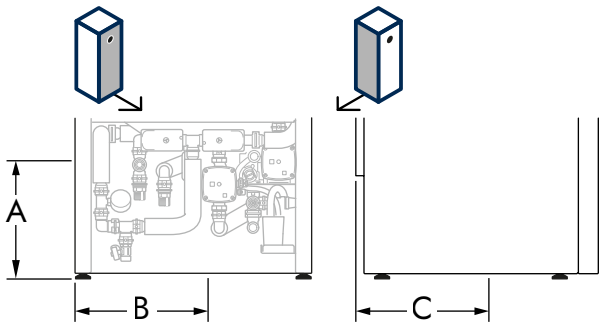

		A[1]	B	C
XL1, distribution system supply	mm	186	227	300[2]
XL2, distribution system return	mm	220	165	451[2]
XL3, cold water	mm	130[2]	451	347
XL4, hot water	mm	200[2]	290	342
XM1, drain outlet	mm	123[2]	502	333

1 Measurements with feet fully inserted.
2 Measurement to center of connection.

Pipe routing coordinates

Avoid pipe routing in the dashed area.

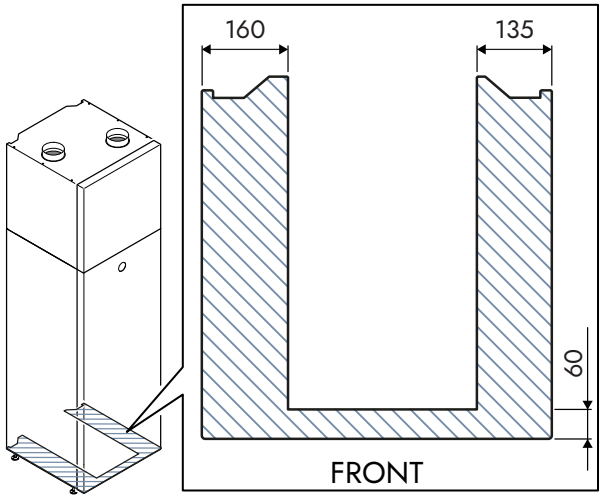

Installation

Distribution system

CAUTION

If the water in the distribution system is aggressive or lime-rich, use a water treatment additive to avoid damages to components.

NOTE

Ensure that sufficient system flow passes through the product. Fully opened thermostats helps maintain sufficient system flow and reduce the risk of operational disturbances.

The distribution system is used to accommodate the indoor comfort demands of the property. The control system adjusts to the comfort demands through heating and cooling suppliers, like for example radiators, floor heating or fan coils.

- Attach the supplied filterball valve on the distribution system return line before the return connection (XL2).
- Connect the return line from the distribution system to the return connection (XL2).
- Connect the supply line to the distribution system to the supply connection (XL1).

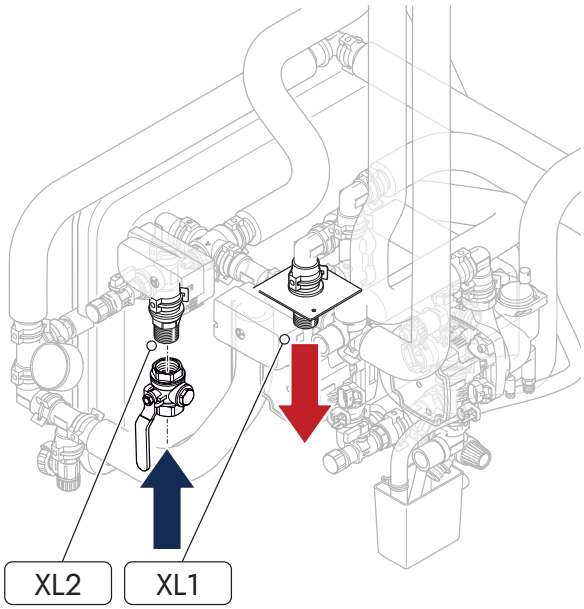

Cooling

The product supports active cooling through the distribution system.

Use the Qvantum app to enable and adjust cooling functionality.

! CAUTION

Incorrect supply line temperature settings and inadequate piping can cause condensation. Condensation can cause moisture damage to the building.

Make sure that the temperature of all cooled surfaces stays above the ambient air dew point, or install condensation insulation.

For cooling with fan coil units, provide a condensate routing solution.

Overflow valve

In cases where the required flow is not obtained along the distribution system, an overflow valve can be installed. The overflow valve maintains circulation in the distribution system so that sufficient flow is maintained.

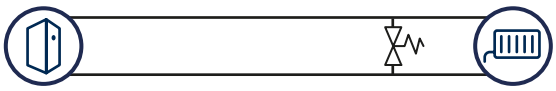

Cold and domestic hot water

- Attach the supplied filterball valve between the cold water main and the cold water connection (XL3).
- Connect the cold water supply to the cold water connection (XL3).
- Connect the domestic hot water system to the hot water connection (XL4).

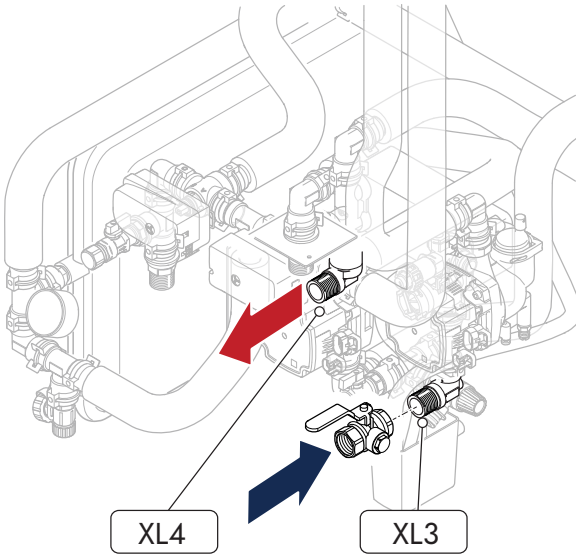

External water heater

If you need a higher volume and/or flow of domestic hot water, you can install an external water heater with the product.

Use an ESBE VTA353 mixing valve or an equivalent mixing valve when you install an electric water heater.

INSTALLATION WITHOUT HOT WATER CIRCULATION

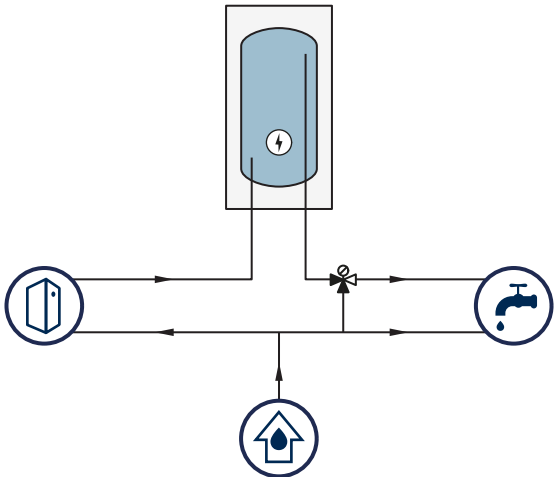

INSTALLATION WITH HOT WATER CIRCULATION

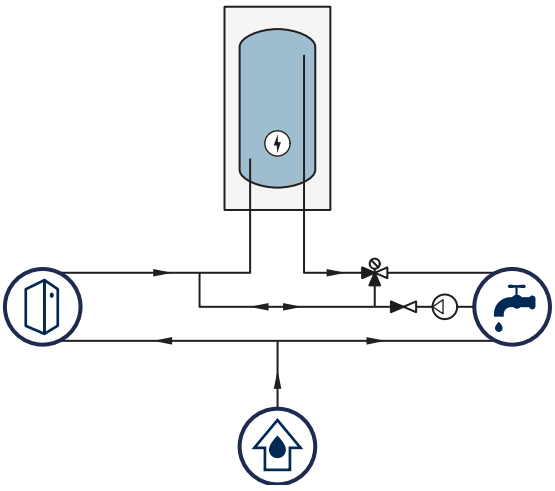

Overflow cup

The overflow cup (WM1) collects condensing water from the ventilation unit and water from the safety valves, if they should release water.

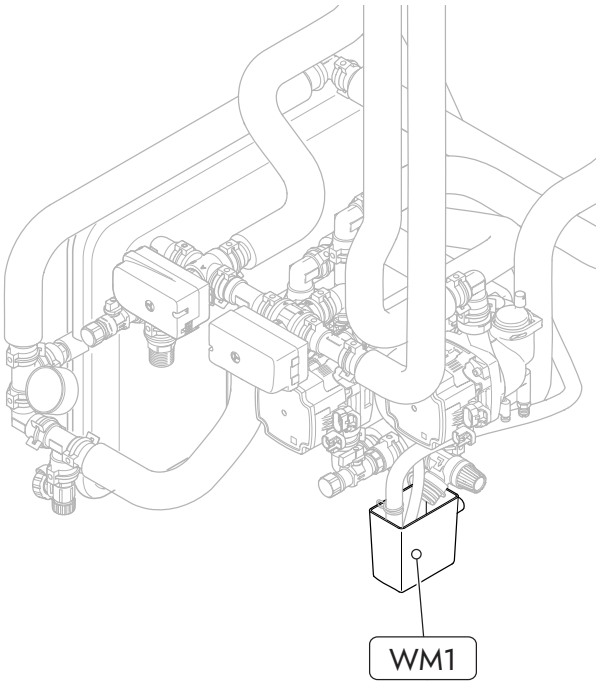

Connect the overflow cup to a floor drain or equivalent water drainage solution.

> ***NOTE***
>
> The hose from the overflow cup must be installed sloping along its entire length; water must be allowed to flow freely.

5 VENTILATION INSTALLATION

Ventilation installation, general

QE is connected to the ventilation ducts through the connections for exhaust air (XL20) and extract air (XL21).

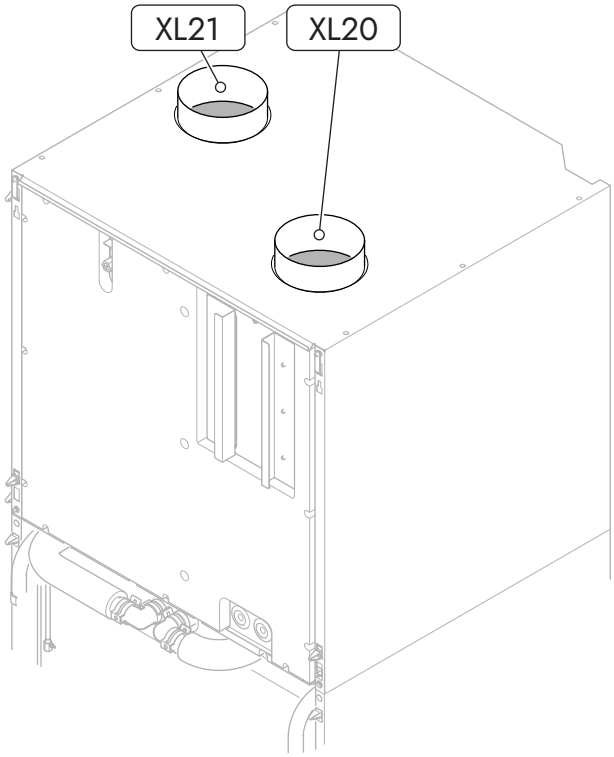

NOTE

The ventilation installation must be performed in accordance with applicable regulations.

- Connect the ventilation with flexible hoses and ensure that they are easily replaceable.
- Ensure that there is enough room to properly maintain the duct.
- Ensure that the ventilation capacity is not decreased due to creasing or sharp bends in the duct work.
- Ensure that the duct system has a minimum of class ATC 4 air tightness.
- To avoid unwanted transportation of fan noise, it is recommended that silencers are installed at appropriate locations throughout the duct work.

TIP

Extra insulation on the ventilation ducts in the installation room can further reduce the noise level.

Exhaust air

- Insulate the exhaust air duct with soundproofing insulation from the top of the product to the inside of the ceiling.
- Connect all exhaust air, except the kitchen fan, so it passes through the heat pump's evaporator.
- Ensure that the distance between the exhaust air device and the kitchen fan is at least 1.5 m.

Extract air

CAUTION

Inadequate condensation insulation increases the risk of condensation precipitation, which can cause structural damage.

Since low temperatures can occur in the extract air duct, effective condensation insulation is critical.

NOTE

Tight bends of the extract air duct can lead to reduced ventilation capacity and increased noise levels.

CAUTION

Do not use a chimney duct for extract air.

- Insulate the extract air duct along its entire length with diffusion-proof insulation with a thickness equivalent to at least 18 mm cellular rubber foam.
- Fully seal the condensation insulation at all joints and gaps.

Measurements and dimensions

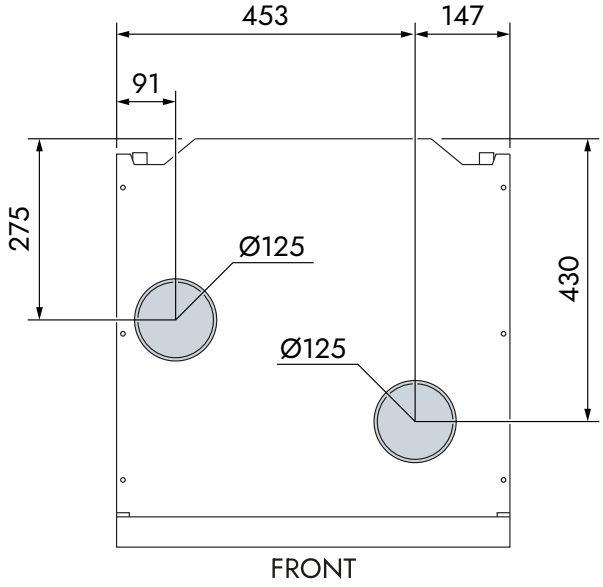

Outside air mixture

General

When outdoor air mixture is applied, the heat pump operates using a mix of exhaust air and outside air during cooling. This provides enough airflow over the evaporator to ensure normal compressor operation.

Install an iris damper (RN1) to set the flow of outdoor air and install a motorized damper (QM40) to turn the outdoor-air mixture on or off.

Limitations

WARNING

Outdoor air mixture is only applicable in climate zones with DOT (Dimensioned Outdoor Temperature) above -10° C.

TIP

Install the required components in such a way that they are easily accessible for maintenance and servicing tasks.

NOTE

The outdoor air temperature is occasionally very low. To avoid damaging the heat pump and/or the house, the damper section and outdoor air duct must be insulated with diffusion proof material. The outdoor air duct must be insulated along its entire length.

Outdoor air operation

The warm air is transferred from the rooms to the heat pump via the house ventilation system. The outdoor air goes through the outdoor-air duct, the iris damper (RN1), and the motorized damper (QM40) to the heat pump.

To avoid frost build-up on the evaporator, the heat pump must be turned off during installation and adjustment.

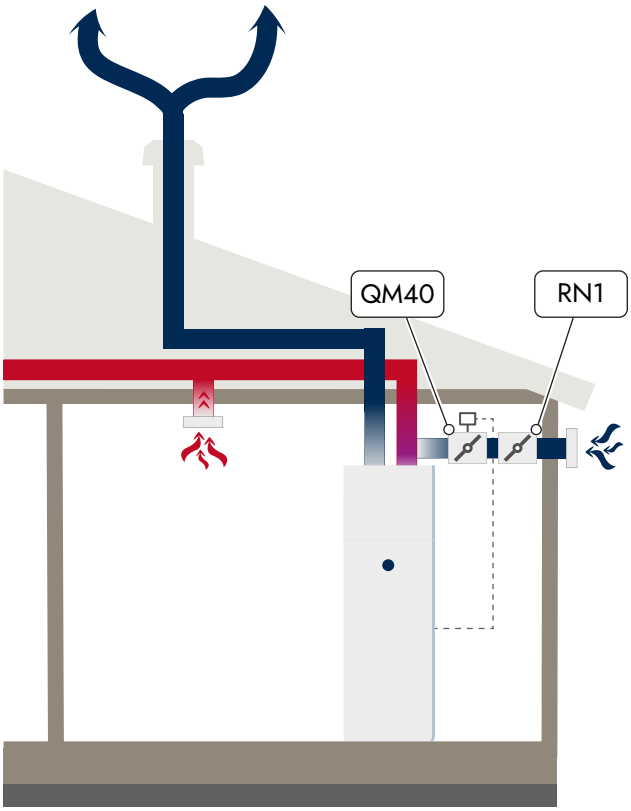

1. Ensure that the iris damper is closed so that no outdoor air is mixed with the exhaust air.
2. Adjust the ventilation without outdoor air mixture to the designed ventilation flow.
3. Fully open the iris damper and increase the fan speed to 100%.
4. Measure the airflow at the reference ventilation grid or damper.
5. Close the iris damper until designed ventilation flow at the reference ventilation grid or damper is obtained.

TIP

If the fan causes unwanted noise, lower the fan speed and open the iris damper until acceptable noise level and sufficient ventilation flow are reached. Opening the iris damper decreases the ventilation flow. Closing the iris damper increases the ventilation flow.

6 ELECTRICAL INSTALLATION

Electrical installation, general

WARNING

All electrical connections must be performed by a qualified electrician and in accordance with applicable regulations.

CAUTION

Do not start the unit until it has been filled with water and all electrical connections have been checked. Premature start-up can cause damage to internal components.

- The unit must be disconnected before the house wiring is insulation tested.
- Power cables should be placed at least 200 mm from communication and sensor cables.
- It is recommended that the product is installed with a separate residual current device (RCD, type B) with a tripping current of 30 mA.

NOTE

An RCBO may be used as an alternative, provided it provides equivalent residual current protection and incorporates the required overcurrent (fuse) protection.

Cable channels

The product has a cable gland (UB1) and a cable channel (UB2) that are used to reach internal electrical connections.

ID	CONNECTION TYPE
UB1	Power supply
UB2	Communication and external connections

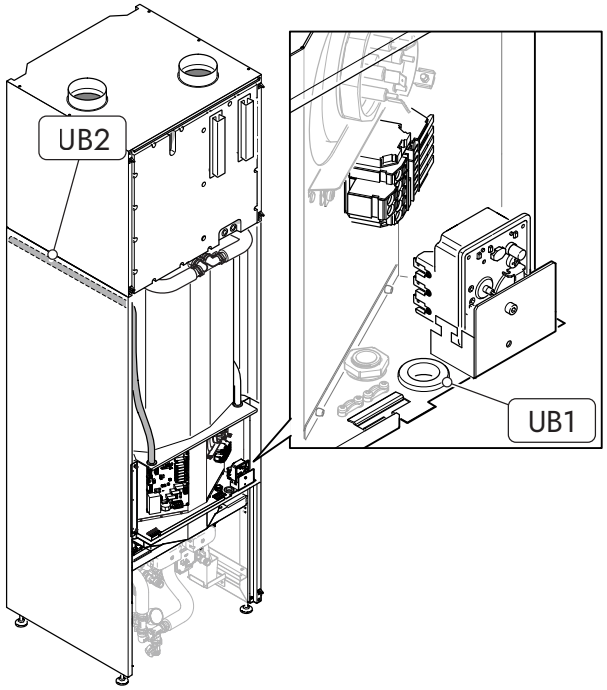

Access

Electrical box

The electrical box is located behind the front cover of the hydronic unit.

Remove the screws of the electrical box cover.

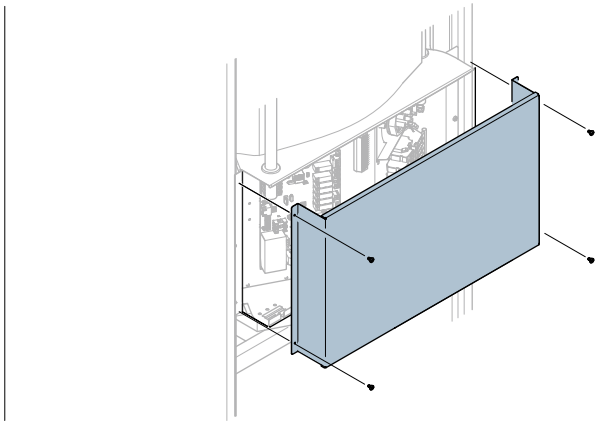

Fuses

The fuses are located on the circuit board (UF1) in the electrical box.

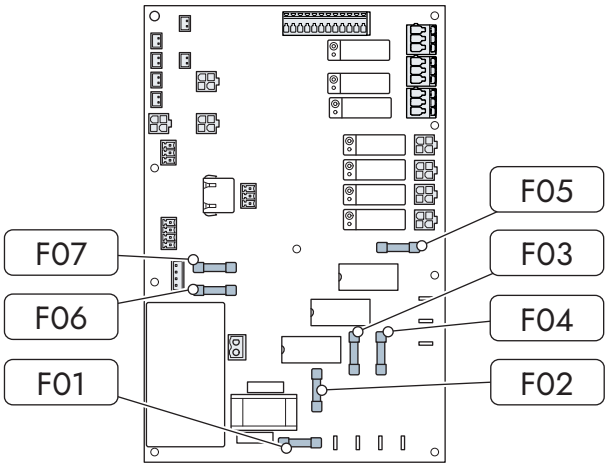

ID[1]	DESTINATION	FUSE TYPE
UF1:F01	Internal 230 V	T4 A, 250 V
UF1:F02	Heat element (L1)	T10 A, 250 V
UF1:F03	Heat element (L2)	T10 A, 250 V
UF1:F04	Heat element (L3)	T10 A, 250 V
UF1:F05	External 230 V	T2 A, 250 V
UF1:F06	Internal 24 V	T630 mA, 250 V
UF1:F07	External 24 V	T500 mA, 250 V

1 Component designations in accordance with IEC 81346.

Electrical connections

Power connection

The QE can be installed in single or three phase applications.

An isolator switch with a 3mm minimum breaking distance must be used to install the unit. Size the minimum cable area in accordance with the fuse rating that is being used. Dimension the fuse size according to the following table.

1X230V	3X400V
35 A (class C)	16 A (class C)

To connect the power supply, open the terminal block lever (1), insert the cable (2) and close the lever (3).

> **NOTE**
>
> The cable strip length should be 13–15mm.

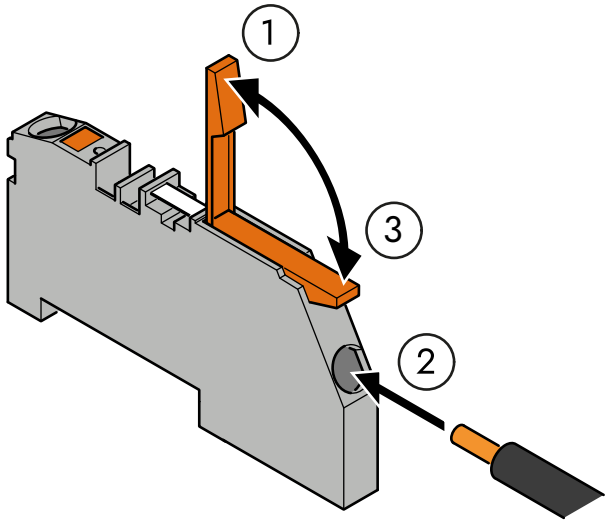

Cable routing

Route the power supply through the cable gland (UB1) at the bottom of the electrical box.

- Draw the cable through the cable rail at the bottom of the product.
- Secure the power cable on the cable rail. Use the supplied cable tie to secure the power cable on the bracket that holds the safety temperature limiter.

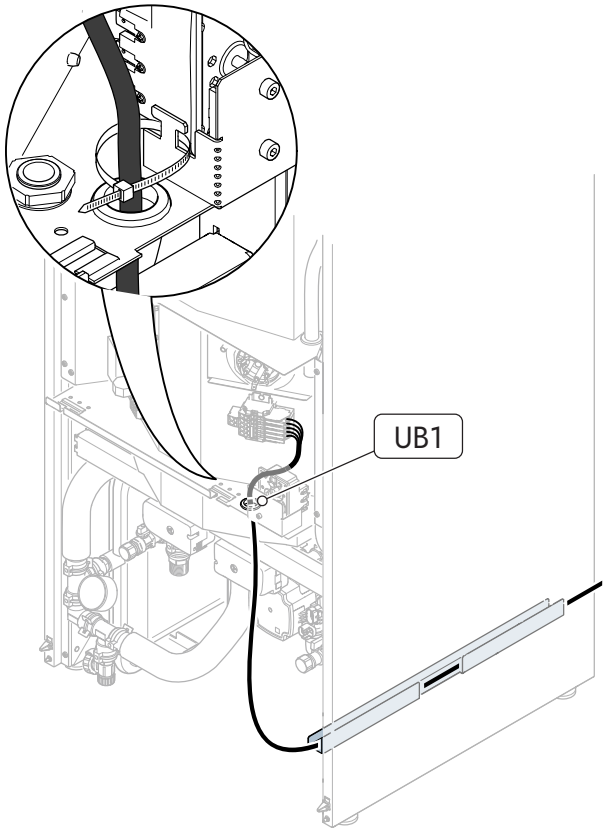

1x230V

For single-phase installations, the supplied 3-pin busbar must be used to bridge the phases on terminal block XD1.

1. Attach the supplied 3-pin busbar so it bridges connections XD1:L1, L2 and L3.

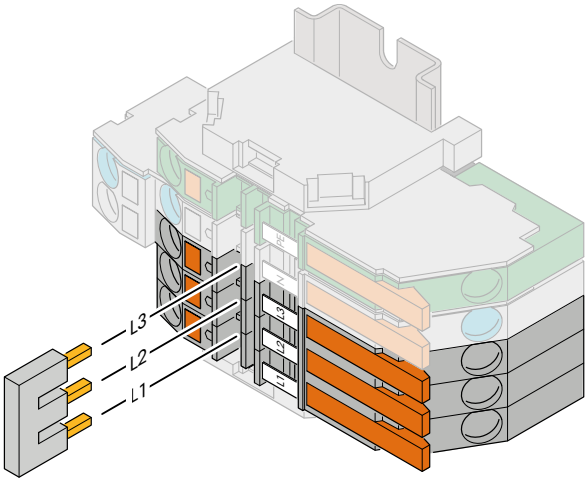

2. Connect the power supply to terminal block XD1.

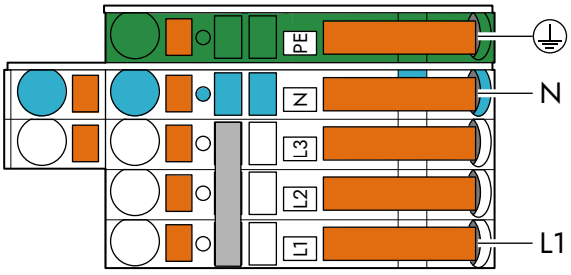

3x400V

> **NOTE**
>
> For three-phase applications, ensure that the house's distribution board is not overloaded. Place the compressor phase (L3) on a low-load group for best performance.

1. Dispose of the supplied 3-pin busbar.

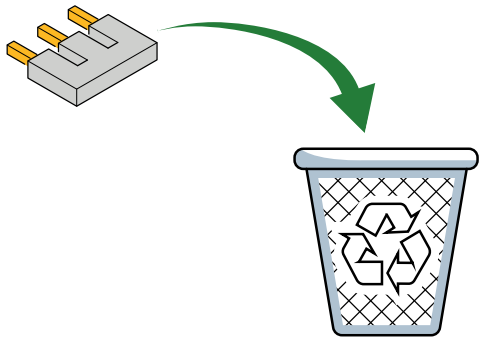

2. Connect the power supply to terminal block XD1.

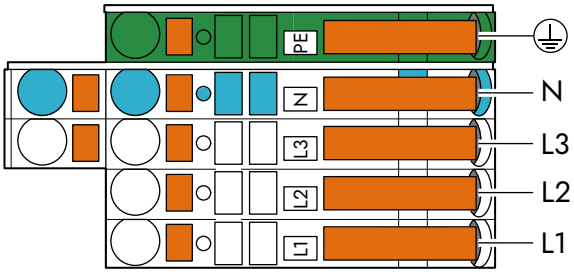

External interfaces

Connect the external interfaces to connection points BT4, GP3, GP10, HA12 and XD2 on the main control board (UF1).

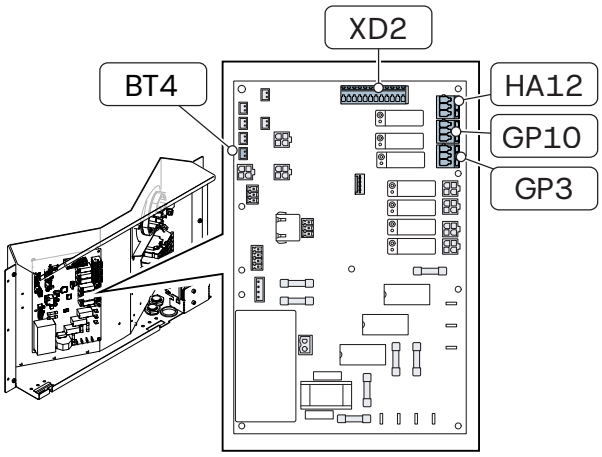

To connect the cables to GP3, GP10, HA12, and XD2, open the terminal block lever (1), insert the cable (2), and close the lever.

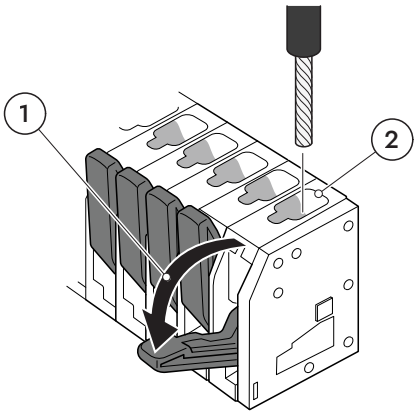

Use a 2-pin JST XHP contact to connect to the BT4 socket.

Sensors

Connect the sensor cables to the terminal strip XD2 on the main board (UF1).

The cables should have an area of 0.5mm² with a cable length up to 50 m.

Ferrite core

For electrical shielding purposes, all sensor cables should be routed through the supplied ferrite core (FE1).

The supplied ferrite core (FE1) must be placed outside of the QE. It is recommended that the ferrite core is mounted at the outlet of the cable channel for external connections (UB2).

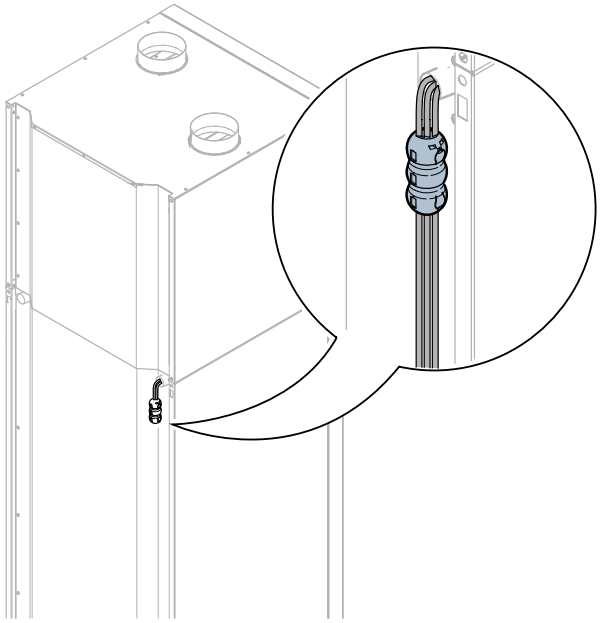

Outdoor temperature sensor

The outdoor temperature sensor (BT1) must be positioned so that it can give an accurate temperature reading. The sensor location should be protected from sun exposure and is preferably installed in a shaded area to the north or northwest.

To prevent condensation in the sensor chamber, seal the tube the cable is running through.

Route the cable through the supplied ferrite core (FE1).

Connect the outdoor temperature sensor to the BT1 terminal blocks.

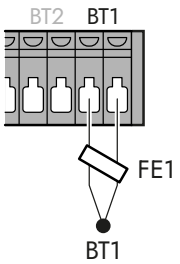

Indoor temperature sensor

The indoor temperature sensor (BT2) enables monitoring and control of the indoor temperature. Installing the indoor sensor is not mandatory, but necessary for reading the indoor temperature.

The sensor should be positioned so that it can give an accurate temperature reading, about 1.5 meters above the floor. Avoid placing it near heaters, radiators, windows, front doors, or anything else comparable. It must not be covered, exposed to air currents, or exposed to heat sources.

Route the cable through the supplied ferrite core (FE1).

Connect the indoor temperature sensor to the BT2 terminal blocks.

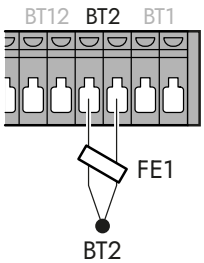

External supply temperature sensor

The external supply temperature sensor (BT12) enables monitoring and control of the external supply line temperature.

If an external supply temperature sensor is used, connect it to the BT12 terminal blocks.

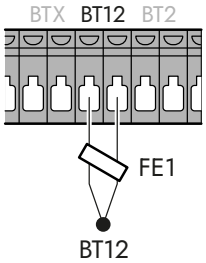

Configurable inputs

The product can receive digital input signals from external devices through socket BT4 or terminal blocks XD2:BTX, XD2:BTY, and XD2:BTZ on the main control board (UF1).

Set the function for each configurable input in the Qvantum app. Select if the system must take action when the contact is open or closed. The inputs provide the control functions that are described below.

FUNCTION	DESCRIPTION
Block compressor	Puts the heat pump in only-addition mode and stops the compressor.
Block heating operation state	Stops the heat pump from actively producing heating.
Block cooling operation state	Stops the heat pump from actively producing cooling.
Block domestic hot water	Blocks domestic hot water production in all operation modes.
Extra domestic hot water	Makes extra hot water when needed and uses the immersion heater if required.
Allow heating	Allows the heat pump to produce heating in manual mode.
Allow cooling	Allows the heat pump to produce cooling in manual or automatic mode.
Allow domestic hot water	Allows the heat pump to produce domestic hot water in manual mode.
Heat curve adjustment	Sets the heating curve adjustment to a user-defined value.
Ventilation mode	Sets the ventilation mode to the selected level.
Close ventilation	Sets the fan speed to 0.
Max addition output	Limits or blocks immersion heater output depending on the value set.
Trigger alarm	Triggers a user-defined alarm.

NOTE

When activating the function **Close ventilation**, the product operates with the immersion heater only.

Configurable outputs

The product can send signals or power to external components through relays GP3, GP10 or HA12 on the main control board (UF1).

CAUTION

Do not connect a load of more than 2 A to the relay.

RELAY	TYPE
GP3	NO 230 V (2 A)
GP10	NO 230 V (2 A)
HA12	NO/NC change-over, potential-free (2 A)

GP3 AND GP10

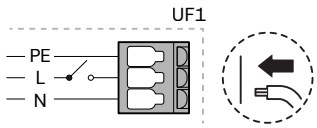

HA12

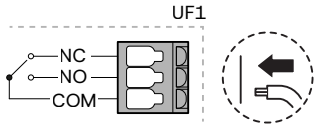

Set the function for each configurable output in the Qvantum app. The outputs provide the indications and control functions described below.

FUNCTION	DESCRIPTION
Defrosting	The output is set to 1 when defrosting is active.
Alarms	The output is set to 1 when one or more alarms are active.
Scheduled output	The output is set to 1 during a user-defined time period.
Central climate system	The output is set to 1 when heating or cooling operation is active.
Cooling indication	The output is set to 1 when cooling operation is active.
Cooling addition	The output is set to 1 if the degree minutes exceed the user-defined threshold.
Delayed cooling/ heating	The output is set to 1 during the transition between domestic hot water mode and cooling mode until the BT10 (condenser out) temperature limit is reached.
Damper control (Cooling)[1]	The output is set to 1 for the damper to change position.

1 Applicable for cooling operation with outdoor air mixture.

SG Ready

Enable the SG Ready function to allow the product to be controlled externally in support of the power grid. The states of SG Ready A (SG A) and SG Ready B (SG B) are used to evaluate the demand from the power grid.

SG Ready is enabled through setting **SG Ready** in the start-up guide in the Qvantum app.

SG A	SG B	PRODUCT BEHAVIOR
0	0	The product is unaffected.
1	0	The product is blocked for a maximum of two hours per day.
0	1	The product is encouraged to run, e.g if the if the current price of electricity is low. In this mode, the set values for heating and production of domestic hot water are slightly increased. If there is no active demand, this mode will make the product encounter a new demand sooner than during normal operation.
1	1	The product is ordered to run. In this mode, the product always detects a heating demand and the set values for heating and production of domestic hot water are increased.

The function requires the connection of two potential-free contacts to the inputs XD2:BTX and XD2:BTY of the product.

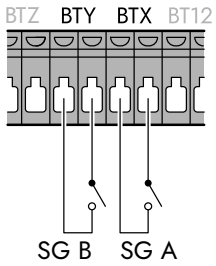

Router installation

Install the supplied router to use the connected functions.

1. Place the router on top of the product or close to it.

   The router needs to be close to the product to keep the wireless connection.
2. Connect the router power cable to a power outlet.

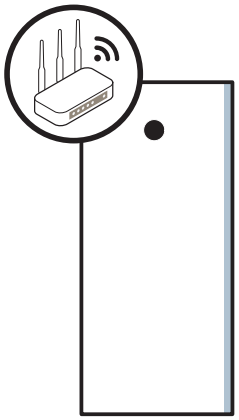

Safety temperature limiter

The unit is equipped with a safety temperature limiter that is behind the cover of the electrical box. If the temperature reaches 95 °C, the safety temperature limiter will stop the power to the immersion heater.

CAUTION

Verify that the safety temperature limiter has not been triggered prior to installation.

A manual reset is required if the safety temperature limiter has been triggered. By pushing the button that can be accessed through a hole in the electrical box cover, the limiter is reset.

The safety temperature limiter can be reset only when the temperature is 10 °C below the trigger temperature.

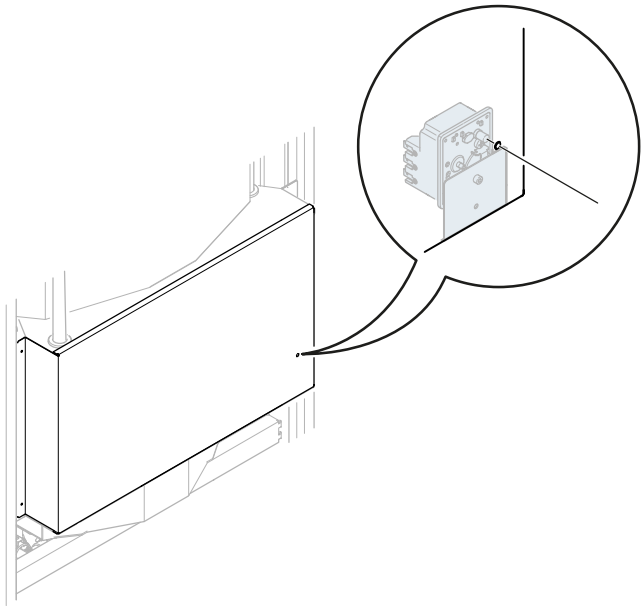

Settings

Immersion heater

The product has a built-in immersion heater. It turns on when the compressor cannot meet the current comfort demand.

Relays increase or decrease the immersion heater output in steps from 1 to 5. The **System overview** page shows an indicator for each active step. The indicators appear only when the immersion heater is active.

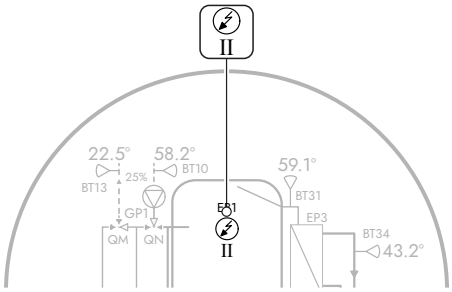

RELAY INDICATOR	STEP	OUTPUT
I	1	1 kW
II	2	2 kW
I, II	3	1 + 2 kW
II, III	4	2 + 2 kW
I, II, III	5	1 + 2 +2 kW

The installation checklist in the Qvantum app allows you to set the maximum immersion heater output.

7 COMMISSIONING

Qvantum app

To properly set up the unit, install the Qvantum app and follow the in-app instructions.

The app contains an installation checklist that helps you control all parts of the installation before starting the heat pump for the first time.

At first start-up of the unit, the app helps you set up the machine.

Installer mode

Setting up a unit requires setting the app to **Installer mode**.

1. Press the profile button in the upper right corner of the app.

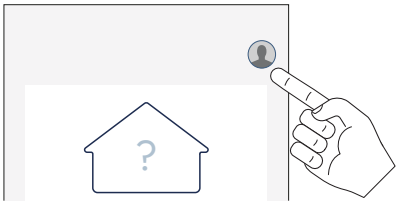

2. On the **Profile page**, scroll downwards.
3. Press the **Installer mode** button.

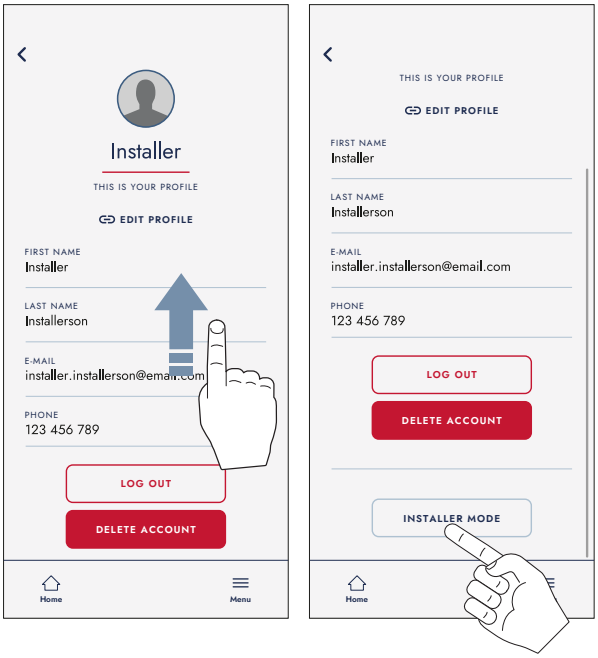

> **TIP**
>
> If the **Installer mode** button is not visible, the app is already set to **Installer mode**.

Preparations

1. Ensure that the unit is turned off.
2. Ensure that the filling valves (QM11, QM12) are entirely closed.

> **NOTE**
>
> The filling valves must be closed during normal operation.

> **NOTE**
>
> The image shows the valves in closed position.

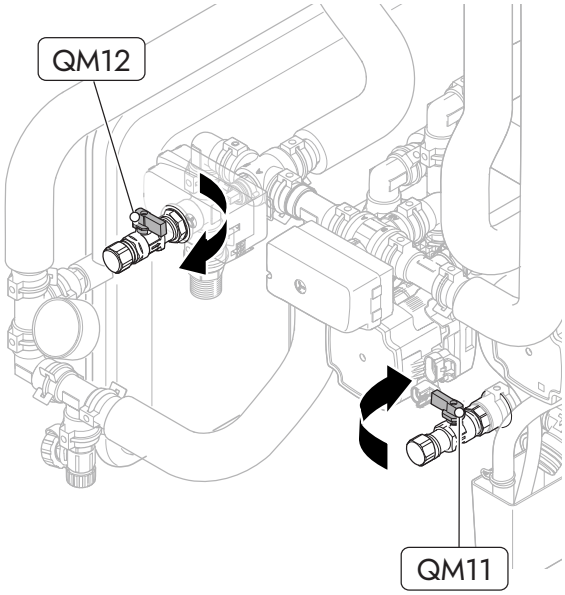

Filling hose

Before filling up the distribution and domestic hot water systems, the supplied filling hose must be attached to the filling valves (QM11 and QM12).

1. Remove the end caps from the filling valves.

> **TIP**
>
> Use a wrench or similar to hold the affected valve in place.

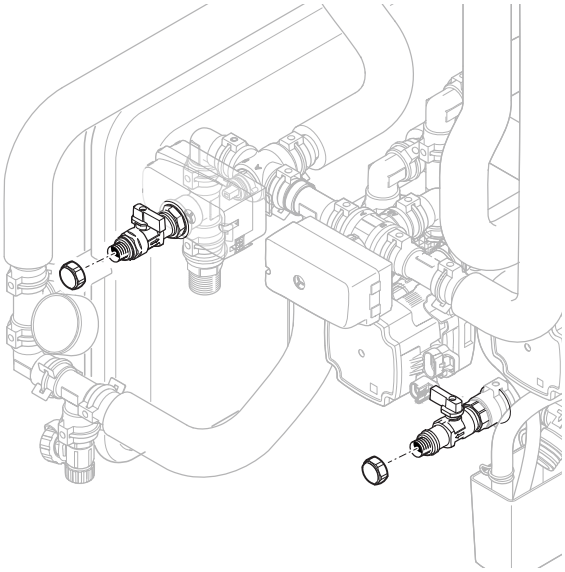

2. Attach the filling hose to the filling valves.

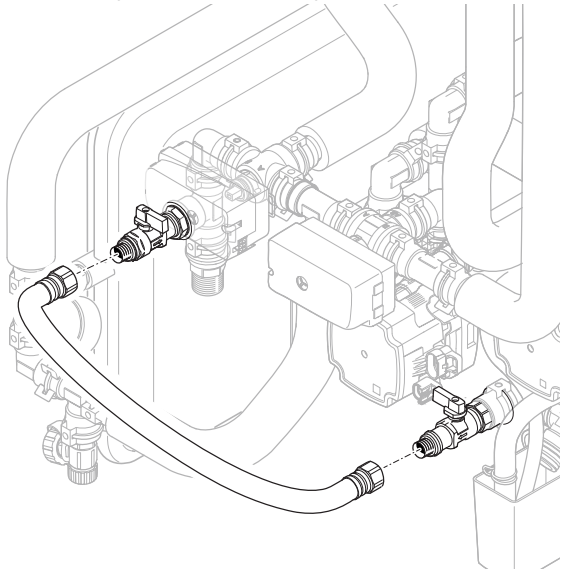

NOTE

After filling, remove the filling hose and reconnect the end caps.

Filling

Domestic hot water

1. Ensure that the filter ball valve that is connected to the cold water connection (XL3) is open.
2. Open one of the facility's hot water taps.
3. Open the facility's main cold water valve.

When no more air comes from the hot water tap, close the tap.

Distribution system

Before opening the bleed valves, attach a hose to the affected valve.

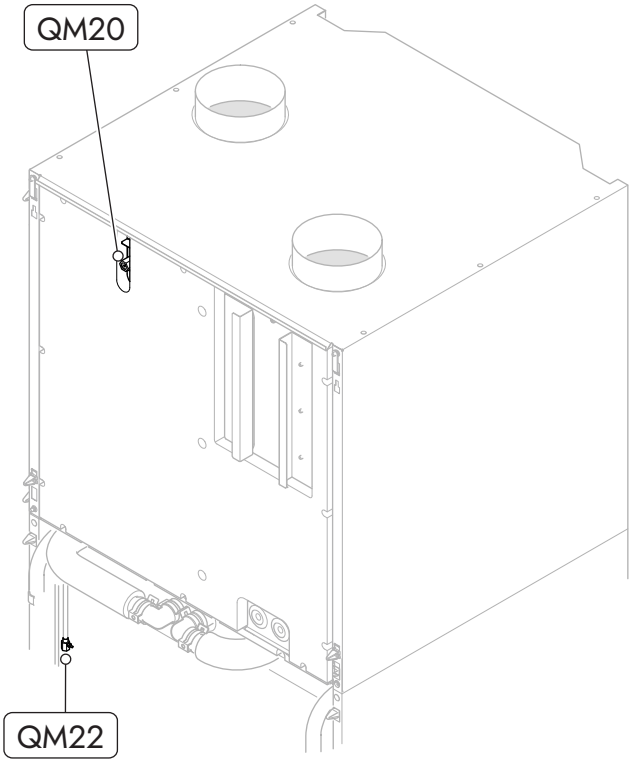

1. Open the bleed valve for the distribution system (QM20) and the accumulator tank (QM22).
2. Ensure that the hose between the filling valves is securely attached.
3. Open the filling valves (QM11 and QM12).
   The distribution system and accumulator tank will be filled with water.
4. Wait for the distribution system to be completely purged and close the bleed valve (QM20).
   The system pressure will increase and affect the pressure gauge. When the system pressure reaches a predefined threshold, the safety valve releases water.
5. Wait for the accumulator tank to be completely purged and close the bleed valve (QM22).
6. Close the filling valves.
7. Reduce the distribution system pressure to approximately 1 - 1.5 bar.
   a) Reduce the distribution system pressure by opening the bleed valves or the safety valve.
8. Ensure that there is water in the overflow cup.
9. Start up the heat pump.
   a) Allow the heat pump to run for one heating cycle and one hot water cycle.
10. Ensure that the heat pump provides room heating and hot water.
11. Open the bleed valves.
12. Wait for the bleed valves to be completely purged.
13. Close the bleed valves.

Filling the overflow cup

Check if the overflow cup (WM1) must be refilled with water.

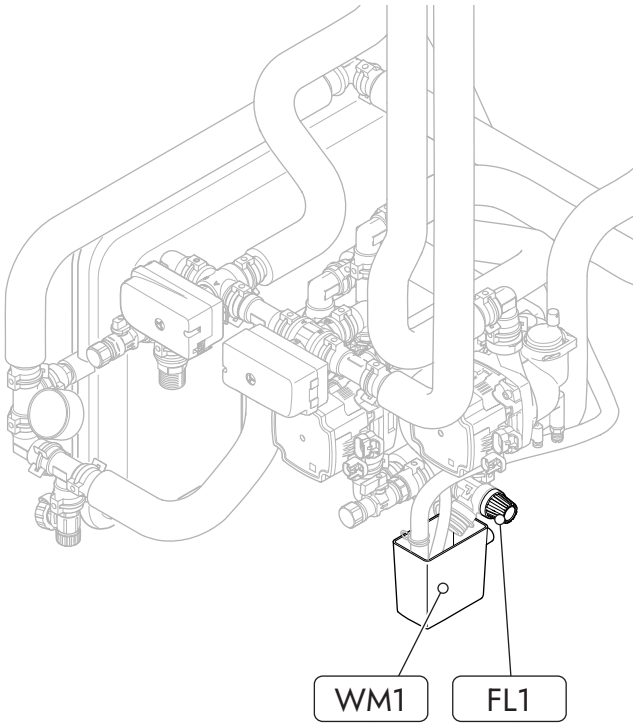

1. Carefully open the safety valve for the hot water (FL1). The overflow cup will slowly fill with water.
2. Close the safety valve for the hot water when the overflow cup has been filled.

Venting

Distribution system

1. Turn off the unit and wait for at least 30 seconds.
2. Turn off the power supply to the unit.
3. Purge the unit by opening the bleed valves (QM20, QM22).
4. Refill and purge the distribution system until all air is removed and adequate system pressure is reached.

First start-up

CAUTION

Before the first start-up, ensure that there is no frozen water in the system.

NOTE

Before the first start-up, ensure that there is water in the distribution system.

NOTE

Set the app profile to **Installer mode** to set up the unit.

1. Turn on the system.
2. Open the Qvantum app.
3. Press **Install & set up unit** from the landing page.
4. Scan the QR code in the user interface.
5. Set up the system by following the steps shown in the app.
6. When all the steps in the app are completed, press **Finish installation** in the display unit.

   To adjust the settings after the first start-up, use the display unit or the Qvantum app. The most common settings are available in both the display unit and the app. To access more advanced settings, the app must be used with the app profile set to **Installer mode**.

If the property is cool at commissioning, the internal additional heating might be activated to help the compressor satisfy the heating demand.

Setting up the ventilation

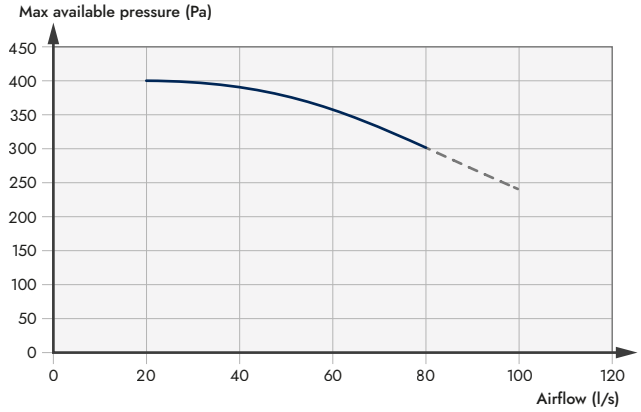

NOTE

If the fan speed is set to 0, the QE will run with only electrical addition.

Ventilation flow and adjustments

NOTE

If the ventilation is not adjusted correctly, it may reduce the efficiency of the heat pump. Insufficient air exchange can cause moisture-related damage to the house.

The ventilation flow must be set up in accordance with local regulations. When setting up the ventilation, ensure that the overflow cup is filled with water and that the compressor is turned off.

To ensure that the heat pump works within its operational range, the ventilation flow must be sufficient. The minimum ventilation flow is declared in the following table. The ventilation speed can be set in the start-up guide through the Qvantum app.

MODEL	MIN. VENTILATION FLOW[1]
QE-4	25 l/s
QE-6	40 l/s

1 The minimum ventilation flow assumes that the room air temperature is higher than 16 °C.

Proper settings and placement of the exhaust air devices are crucial for reaching sufficient air exchange. Ensure that the heat pump fan is adjusted so that the required air exchange is obtained.

Ventilation settings

The ventilation settings are available through the Qvantum app.

Reduced fan speed

Adjust this value to set the fan speed for reduced ventilation mode. If there is a comfort demand, the fan speed changes from **Reduced fan speed** to **Min fan speed for compressor**.

Min fan speed for compressor

Adjust this value to set the minimum fan for compressor operation. Make sure that the fan speed gives the minimum ventilation flow for the product.

Normal fan speed

Adjust this value to set the fan speed for standard operation. Set the fan speed to match the air exchange need of the house or apartment. If there is a comfort demand and **Normal fan speed** is lower than **Min fan speed for compressor**, the fan speed changes to **Min fan speed for compressor**.

Fan speed extra ventilation

Adjust this value to set the fan speed for extra ventilation mode.

Pump capacity, heating medium

The speed of the heating medium pump is adjusted through the Qvantum app.

The speed settings **Pump speed heating** and **Pump speed idle mode** are available in the app.

Adjust **Pump speed heating** to set the pump speed for when heating is required.

Adjust **Pump speed idle mode** to set the pump speed for when there is no heating demand.

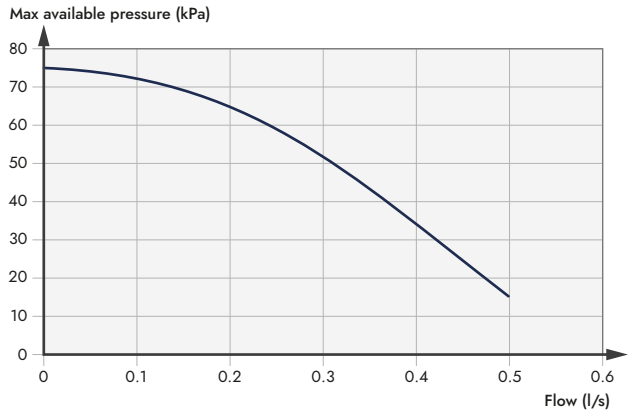

Cooling settings

The cooling settings are available through the Qvantum app.

Use cooling

Option for enabling or disabling cooling functionality.

Condensation Protection

Option for enabling or disabling condensation protection when cooling is prioritized. When enabled, this function ensures that the supply line temperature is high enough to prevent condensation.

Min Supply Cooling

Setting for the minimum allowed supply line temperature when cooling is prioritized.

Parallel curve offset

Setting for adjusting the parallel offset of the cooling curve. A negative offset reduces the requested supply line temperature. A positive offset increases the requested supply line temperature.

Curve number

Setting for choosing the desired cooling curve. A high curve number gives a faster response to a cooling demand than a low curve number.

Start cooling temperature

Setting for the outdoor temperature at which cooling is allowed. When the set filtered outdoor temperature is equal to or higher than the **Start cooling temperature** value, cooling is allowed.

Time between heating/cooling

Setting for when cooling is allowed after a heating cycle and when heating is allowed after a cooling cycle.

Pump speed cooling

Setting for the speed of the heating medium pump when there is a cooling demand.

Screed dryout

The screed dryout program automatically heats screed floors. The system controls the supply temperature in steps, based on the chosen program (P1, P2 or P3). When all steps are complete, the screed dryout stops automatically.

You can enable the **Screed dryout** function from the installation view in the user interface.

TIP

You can set the function to operate with the compressor and electrical addition, or with electrical addition only.

NOTE

The installation view is available only when you start the product for the first time, before the installation is complete.

CAUTION

You must wait for the screed resting time to finish. You can start the screed heating program only after this time.

Operating schedule

Select the screed dryout program. Verify that it matches the type of screed.

CAUTION

Check the factory default values. Make sure that they meed the screed manufacturer's specifications for drying.

PROGRAM	
P1	18 days, 20-50-20 °C
P2	14 days, 20-45-25 °C

PROGRAM	
P3	8 days, 25-45-20 °C

P1: 18 days, 20-50-20 °C

DRYOUT PHASE	DAY	SUPPLY LINE TEMPERATURE
Functional heating	1	20 °C
	2	30 °C
	3	40 °C
	4	50 °C
Heating for curing	5 – 15	50 °C
Heating down	16	40 °C
	17	30 °C
	18	20 °C

P2: 14 days, 20-45-25 °C

DRYOUT PHASE	DAY	SUPPLY LINE TEMPERATURE
Functional heating	1 – 3	20 °C
	4	25 °C
	5	30 °C
	6	35 °C
	7	40 °C
Heating for curing	8 –12	45 °C
Heating down	13	35 °C
	14	25 °C

P3: 8 days, 25-45-20 °C

DRYOUT PHASE	DAY	SUPPLY LINE TEMPERATURE
Functional heating	1 – 3	25 °C
Heating for curing	4 –7	Max. 45 °C
Heating down	8	Heat down to 25 °C

Add additional devices

If you connect an accessory to the product, you must activate the accessory in the app. The procedure to add an accessory changes if you do it during commissioning (**Installer mode**) or after commissioning (**Home profile**).

During commissioning (Installer mode)

When the QE has been set-up through the start-up guide, navigate to the installation overview.

1. Press the **Add additional unit** button.

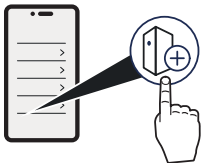

2. Press the **Add a device to heat pump** button.
3. Select the accessory.

The app guides you through the accessory installation procedure.

After commissioning (Home profile)

1. From the Qvantum app landing page, press the settings button.

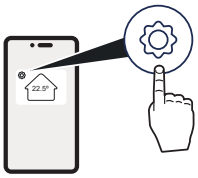

2. Press the **Additional devices** button.

   This view lets you manage already installed devices as well as add new device.
3. Press the **Add a device to heat pump** button.
4. Select the accessory.

The app guides you through the accessory installation procedure.

8 USER INTERFACE

Introduction

The Qvantum QE is equipped with a user friendly touchscreen display. Through the display, the most necessary settings can be accessed and adjusted.

More settings are available through the Qvantum app.

> *TIP*
>
> The layout of the display may vary depending on software version.

Using the display unit

Use the arrow buttons (1) on the sides of the interface to access the different pages in the display unit.

For display pages with settings, use the slider (2) at the bottom of the display to adjust the settings.

If an alarm is active, it shown through a warning symbol (3) at the top of the page.

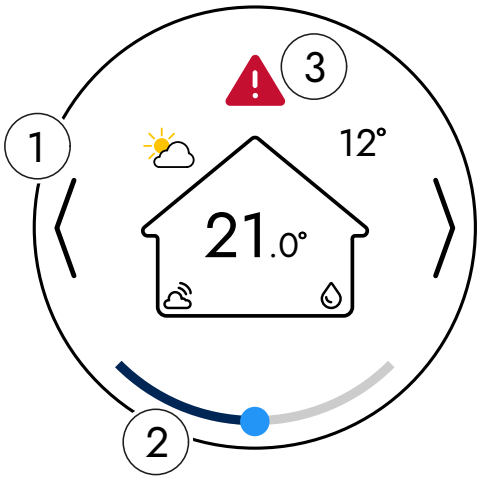

Swipe upwards and downwards or use the arrow buttons to access all content on display pages that contain multiple lines of information.

Indications

Different indicators are used to provide information to the user about the status of the product.

The middle area at the top of the screen shows if there any active operational disturbances.

The lower left-hand corner of the house symbol shows connectivity-related information.

The lower right-hand corner of the house symbol shows what demand is prioritized by the product.

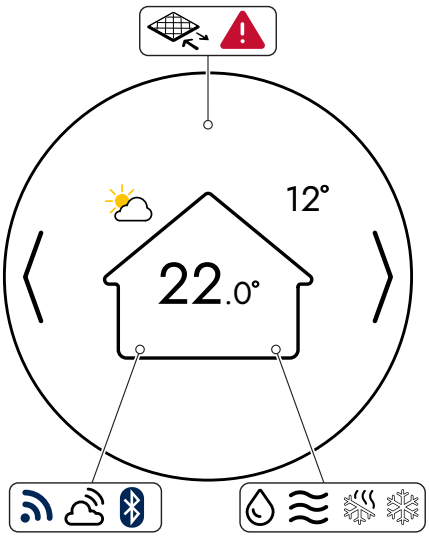

- Notification about an active alarm.
- Notification about the need for filter replacement.
- Wi-Fi signal strength. The symbol is shown before the product is online.
- The product is online.
- Bluetooth connection established through the Qvantum app.
- Domestic hot water production is active.
- Heating is active.
- Defrosting is active.
- Cooling is active.
- 12° Current outdoor air temperature.
- Weather indicator.

Indoor climate

The indoor climate is modified on the **Home page** of the display unit.

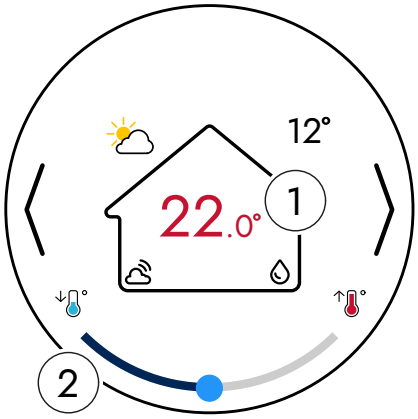

1. Desired or actual indoor temperature. If an indoor temperature sensor is set as the controlling sensor, the value inside the house is colored red when changing the setting.
2. Slider for adjusting the indoor temperature. Press the house icon to show the slider.

When adjusting the temperature, the value inside the house shows the desired value. A short time after the setting has been adjusted, the value in the house shows the actual temperature.

> *TIP*
>
> If an indoor temperature sensor is not present, the value inside the house shows the heating curve offset.

Temperature control

How the indoor temperature in the property is controlled depends on whether an indoor or outdoor temperature sensor is used for temperature control. If an indoor temperature sensor is not installed, or if it is only used for reading the indoor temperature, the temperature is controlled through the selected heating curve.

Select the controlling sensor through **Settings** > **Advanced** > **Temperature control**.

Indoor temperature sensor

When an indoor temperature sensor is set as the controlling sensor, the product compares the actual and requested indoor temperature to adjust the supply line temperature.

Heating curve

> *TIP*
>
> Selecting or setting up a manual heating curve is done when setting up the product during installation.

If an indoor temperature sensor is missing, or not set as a controlling sensor, the indoor temperature is controlled by the heating curve. The heating curve for the property is used to calculate the necessary supply line temperature at different outdoor temperatures.

When adjusting the indoor temperature, the heating curve offset shifts parallel downwards or upwards to decrease or increase the supply line temperature at a given outdoor temperature. The value inside the house on the **Home page** shows if the curve offset is shifted upwards or downwards, and with how many steps.

The following diagram shows the heating curve for a property with a radiator system and how the curve is affected by changing the offset.

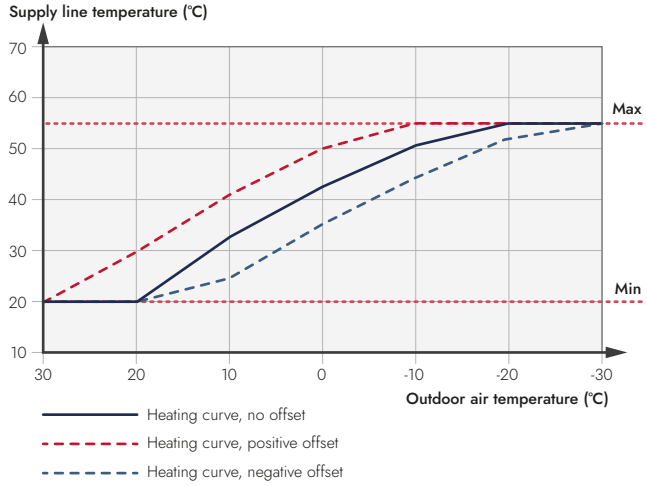

Cooling curve

Cooling functionality must be set up in the start-up guide of the Qvantum app.

If the product prioritizes cooling, it uses the selected cooling curve. The product uses the cooling curve to calculate the necessary supply line temperature at different outdoor temperatures

A high curve number gives a faster response to a cooling demand than a low curve number.

If you apply an offset to the cooling curve, the product moves the curve up or down. The offset increases or decreases the supply line temperature for a given outdoor temperature

The diagram shows high and low cooling curves. The diagram also shows how an offset changes the high curve.

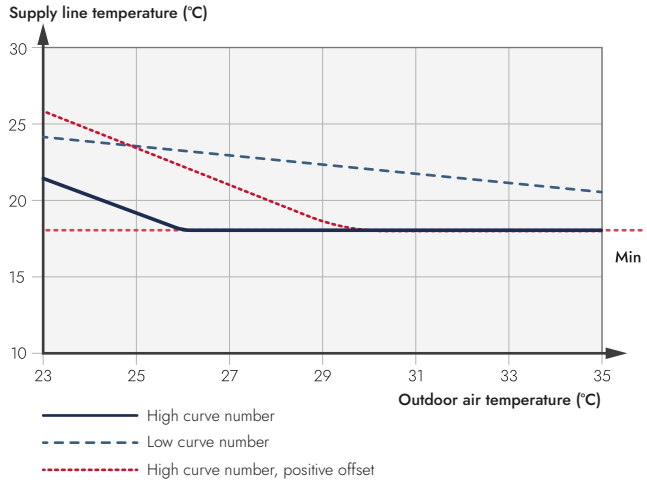

Domestic hot water

The page for domestic hot water is used to deliver information about the hot water production as well as modify the hot water capacity.

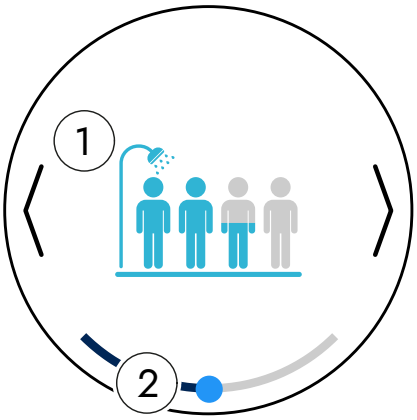

1. Indicator that shows the amount of remaining hot water. The number of characters depend on the requested hot water capacity. When the set temperature is reached, all characters are colored blue.
2. Slider for adjusting the hot water capacity.

Comfort and scheduling

The comfort and scheduling page is used to activate and control functions that accommodate needs that are outside of the heat pump's default operational modes.

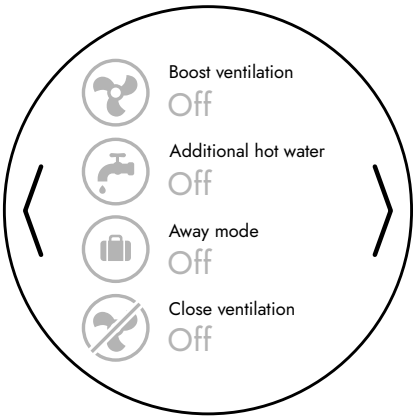

Boost ventilation boosts the ventilation to reach additional air exchange. This is useful when, for example, the house is more crowded than usual.

Additional hot water increases the hot water production for instances where additional hot water is desired.

> *NOTE*
>
> Depending on the current operating mode of the unit, turning on **Additional hot water** may also temporarily activate the immersion heater.

Away mode is a scheduling function that is useful when leaving the house for longer periods of time. When the away mode is activated, the heat pump lowers the indoor temperature and the hot water production.

Close ventilation shuts down the fans in the unit.

> *NOTE*
>
> If **Close ventilation** is set to **Closed**, the unit will run with only electrical addition.

Scheduler

Use the **Scheduler** in the Qvantum app to set operating times for different product functions. Example: set a temporary increase for domestic hot water production during workday mornings.

Go to **Settings** > **Scheduler** to manage your schedules.

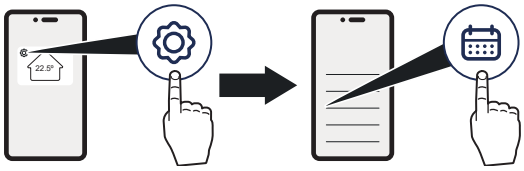

To create a schedule, you must use the **Create mode** function and the **Create block** function.

Use **Create mode** to declare the action or actions the product must do. Assign a name and a color when you create a **Mode**.

Use **Create block** to declare the time when the product must do the action.

The following schedule includes the days and hours for the green **Mode** and the blue **Mode**.

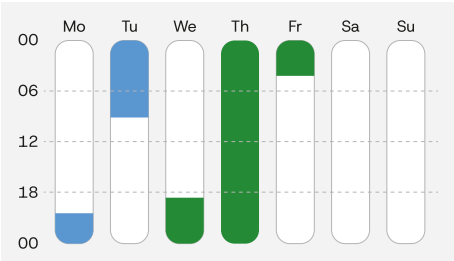

Settings

The **Settings** page has a number of sub pages that are used to retrieve product information, change display options, and configure product performance.

Settings	Device information	Open source	
	Previous alarms		
	Language		
	Service functions	Firmware update	
		Filter change	
		Purge air from system	
		System overview	
		Remote service	
		Overrides	
	Advanced	Operation mode	
		Temperature control	
		Hot water	
		Connectivity	Modbus External
			Allow Qvantum support
		Reboot display	
	Shut down		

Device information

This page contains product-specific information related to product identification, software versions and the Wi-Fi connection.

Open-source code

This page contains a link to a web page that lists all the open-source code licenses that are used for the user interface.

Recent alarms

This page gathers all recent alarms that have been detected by the product.

Language

Use this page to set the preferred language for the user interface.

Service functions

Firmware update

This page shows if there is an available firmware update for the main control board (UF1). If a newer version is available, press the button **Update** to update the firmware.

Filter change

This page shows the time remaining until the next filter change.

The page has two options related to the filter change.

Turn fan off

Use this button to turn the fan off. The fan must be turned off before replacing the filters.

After pressing the button, instructions related to the filter change are shown in the display unit.

Remind me

This button will, through a delayed notification in the user interface, remind the user about the need for a filter change.

The fan restarts when exiting the **Filter change** page.

Purge air from system

Use this page to temporarily turn off the heating medium pump before purging the distribution system.

Press the button **Turn pump off** to stop the heating medium pump.

After purging the distribution system, press the button **Turn pump on** to restart the heating medium pump.

If the **Turn pump on** button is not pressed, the heating medium pump will automatically restart after three hours.

System overview

The **System overview** in the display unit provides operational information for the product.

Switch between the hydronic unit and the compressor unit views by pressing the **Toggle** button.

Exit the **System overview** by pressing the **Back** button.

Hydronic unit

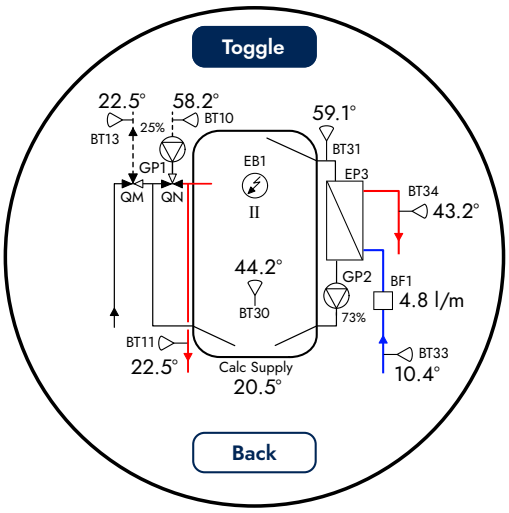

ID	DESCRIPTION
EB1	Immersion heater
EP3[1]	Plate heat exchanger
Calc Supply	Requested supply line temperature
BF1	Flow sensor
BT10	Temperature, condenser out
BT11	Temperature, supply line
BT13	Temperature, condenser in
BT30	Temperature, buffer tank
BT31	Temperature, domestic hot water primary inlet
BT33	Temperature, cold water
BT34	Temperature, hot water
GP1	Circulation pump, distribution system
GP2	Circulation pump, domestic hot water
QM	Diverting valve
QN	Shunt valve

1 Designation is not shown in the user interface.

Compressor unit

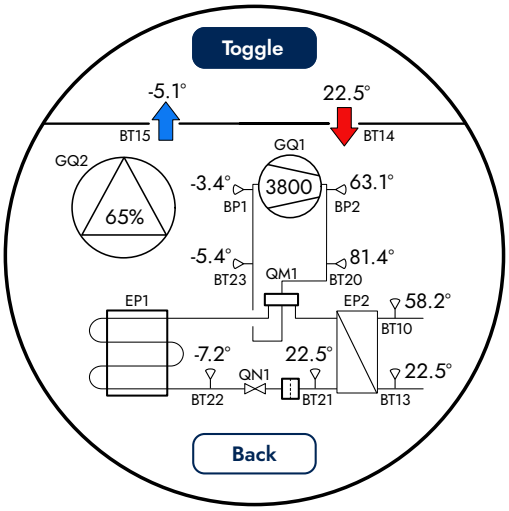

ID	DESCRIPTION
GQ2[1]	Exhaust air fan
GQ1[1]	Compressor
EP1[1]	Evaporator
EP2[1]	Condenser
BP1	Pressure transmitter, suction
BP2	Pressure transmitter, discharge
BT10	Temperature, condenser out
BT13	Temperature, condenser in
BT14	Temperature, heating medium return
BT15	Temperature, extract air
BT20	Temperature, discharge line
BT21	Temperature, liquid line
BT22	Temperature, evaporator inlet
BT23	Temperature, suction line
QM1	Four-way valve
QN1	Expansion valve

1 Designation is not shown in the user interface.

Overrides

This page shows information about functions that are currently limiting the performance of the product.

Remote service

This function can be used to allow a technican to troubleshoot or update settings without visiting the site. The technican must request access through the Qvantum app.

Use this function to generate a remote service code and to grant or deny remote service access to the technican.

Advanced

Operation mode

Through the **Operation mode** page it is possible to set the desired prioritization of the product. The main settings allow the user to choose between automatic mode, manual mode and a mode where only electrical addition is allowed.

Auto

When the operation mode is set to **Auto**, the product automatically switches between heating and domestic hot water production, depending on the current demand. When in **Auto**, the electrical addition is engaged if necessary.

Manual

When the operation mode is set to **Manual**, it is possible to allow or prohibit heating and the user can choose to enable or disable the production of domestic hot water.

Manual mode allows for the user to enable or disable the use of electrical addition. If electrical addition is disabled, it is still allowed for production of domestic hot water and product protective functions.

Electrical addition only

This operation mode limits the product to run with only the electrical addition.

Temperature control

This page contains options related to the indoor temperature control.

Use the drop-down list to select the sensor that controls the indoor temperature. Choose between the indoor temperature sensor (BT2) and the outdoor temperature sensor (BT1).

If a Qvantum QT is installed with the product, you can set it as the controlling sensor.

Compensation:

The compensation function is only available when an indoor temperature sensor is set as the controlling sensor. The compensation can be set to **Minimum**, **Normal** or **Maximum**.

The compensation controls the response time when a significant difference between the actual and the target indoor temperature is detected. If the compensation is set to **Maximum**, the response time is faster. If the compensation is set to **Minimum**, the response time is slower.

> *TIP*
>
> It is recommended to set a higher compensation in properties with high heat losses, e.g. older houses with poor insulation.

Hot water

This page shows settings to control domestic hot water production.

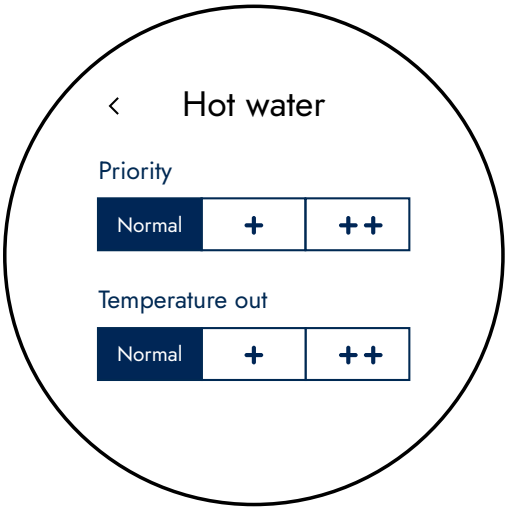

Priority

The product supplies heating, cooling, or domestic hot water according to the current comfort demand. Priority time is the period when the product serves this demand without switching to another function.

If more than one comfort demand is active, the product changes between the active demands. It continues to change until one demand is complete.

Increase the Priority setting to keep the product in domestic hot water mode for a longer time when more than one demand is active.

Temperature out

The Temperature out setting changes the target temperature for domestic hot water. Increase the setting to increase the target temperature.

Connectivity

Modbus External

This page contains information related to Modbus connectivity.

Modbus External must be set up using the Qvantum app.

Allow Qvantum support

This function lets a Qvantum after-sales representative access the unit remotely for troubleshooting.

Reboot display

The display is rebooted through **Settings** > **Advanced** > **Reboot display**.

Shutting down the unit

The unit is shut down through **Settings** > **Shut down**.

9 SERVICE

General

CAUTION

Maintenance and servicing must be performed by persons with sufficient knowledge about the task.

Remote service

This section explains how a home owner and an installer enable remote access to the product for service and troubleshooting.

The home owner must approve remote access before the installer or service technician can connect to the product.

Remote service allows a technician to troubleshoot or update settings without visiting the site. Access is granted through the Qvantum app or the product's user interface. Remote access is time-limited and automatically expires after a certain period.

1. The installer opens the Qvantum app and requests a service code from the home owner.

   Navigate to: **Remote service**.
2. The home owner generates the remote service code.
   a) Using the app: **Menu** > **Remote service**.
   b) Using the user interface: **Settings** > **Service functions** > **Remote service**.

   TIP

   Through the app, the home owner can see which technicians have remote access and can revoke access for individual technicians.
3. The home owner gives the code to the installer.
4. The installer enters the code in the app.
5. The home owner grants access through the app or product interface.

The installer receives remote access to the product. The home owner is notified that remote access is active.

Maintenance

NOTE

The end user must be informed about necessary maintenance actions.

Floor drain

Check the overflow cup and any floor drains for obstructions on a regular basis; water must be allowed to flow freely. If required, clean.

Filter change

NOTE

The fans must be switched off when changing the filters. Turn off the fans by switching off the unit or by using the function **Settings** > **Service functions** > **Filter change**.

The filters in the heat pump unit must be replaced on a regular basis. The filter cassettes are accessed by removing the front cover of the heat pump. Replace both filters at the same time.

The display unit shows a notification when the filters have to be changed.

Order new filters by contacting your local Qvantum sales department.

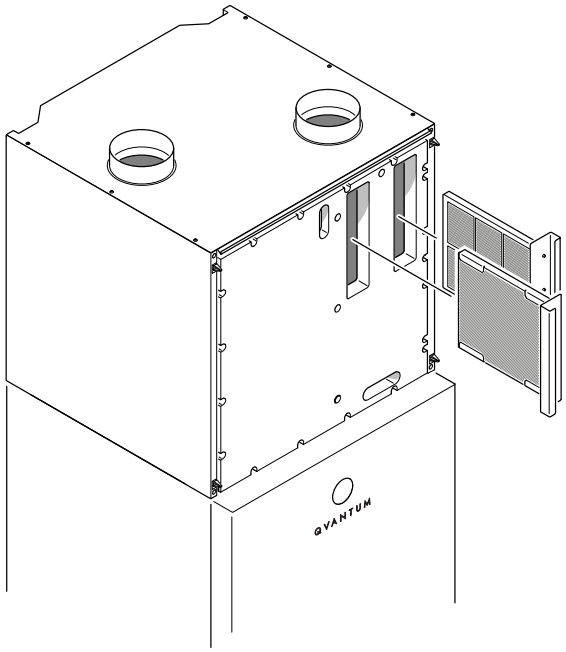

1. Remove and dispose of the used filters.
2. Use a cloth and clean the filter cartridges.
3. Place the new filter in the filter cartridges.
4. Reinstall the filter cartridges.

Overflow cup

The overflow cup in the heat pump must be cleaned regularly so that water can run unhindered.

1. Turn off the heat pump.
2. Clean the overflow cup.
3. Turn on the heat pump.

Ensure that water runs freely through the overflow cup.

Safety valve regular exercising

Valve exercising removes deposits to ensure correct operation of the valve.

Exercise the safety valve for the hot water circuit (FL1) about one time per year.

NOTE

Do not exercise the safety valve for the distribution system (FL2).

NOTE

When the valve is exercised, water flows from the discharge pipe.

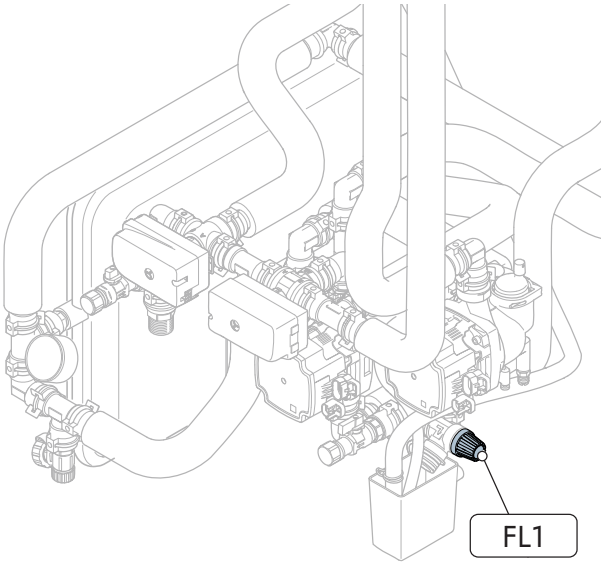

Filterball valves

The filterball valves should be cleaned regularly to prevent clogging.

Turn off the product before cleaning the filterball valves.

1. Close the filterball valve.

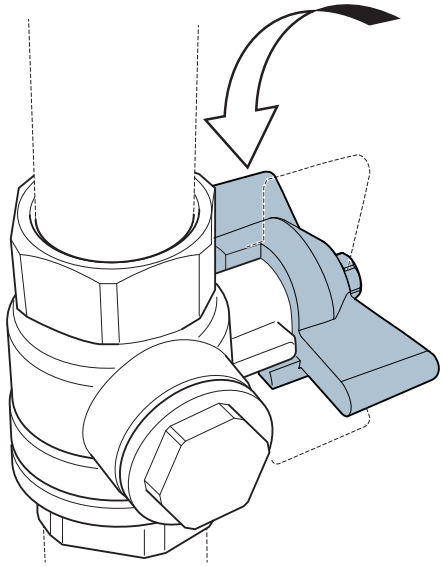

2. Remove the cap nut.

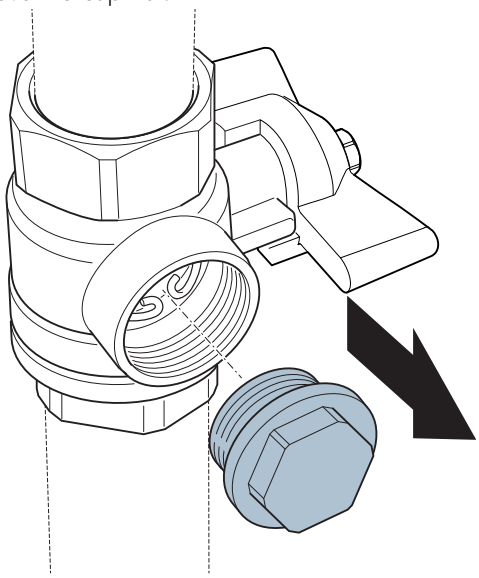

3. Remove the locking ring.

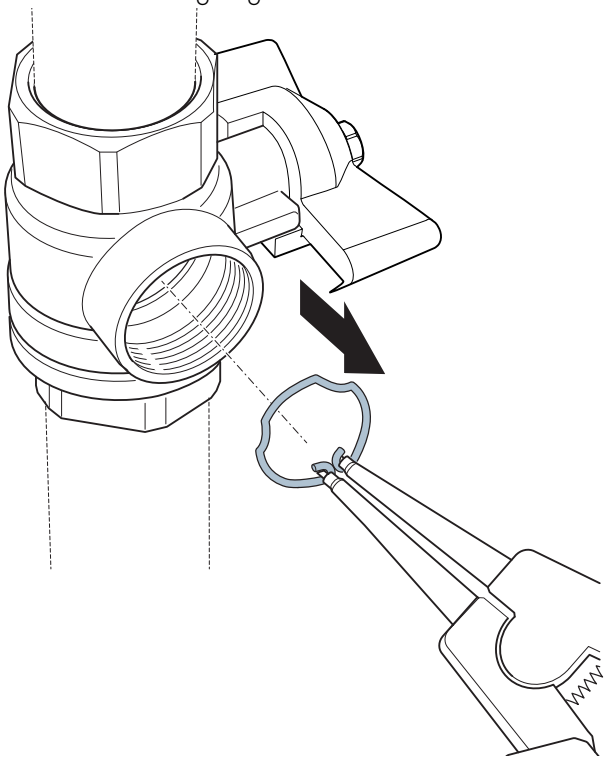

4. Remove the filter.

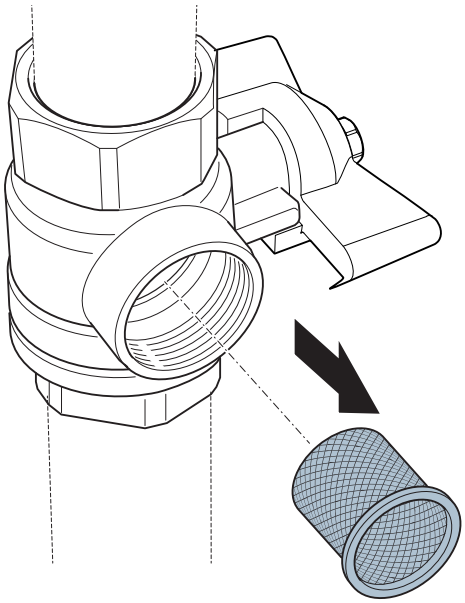

5. Clean the filter.

After cleaning the filter, reassemble the filterball valve and open it before turning on the product.

NOTE

When reassembling the filterball valve, ensure that the locking ring is positioned properly.

Service actions

Draining the product

In case of component changes or if the heat pump must be moved, it might be necessary to drain the product of water. Emptying the accumulator tank is done through the tank drain connection (QM13). If necessary, rotate the drain valve by pulling it upwards or downwards.

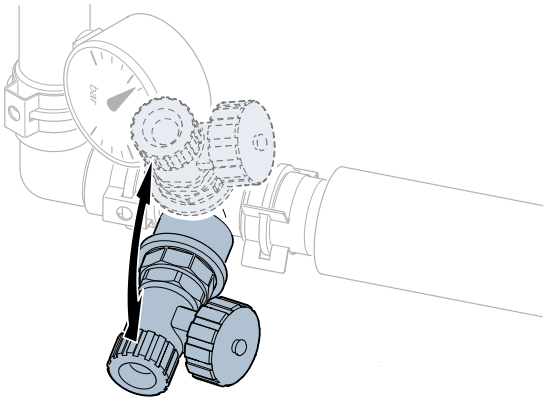

CAUTION

Turn off the unit before draining the accumulator tank.

1. Remove the cap from the drain connection.

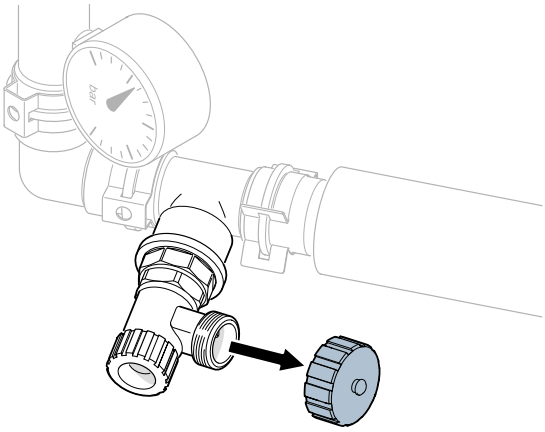

2. Attach a garden hose tap connector (1/2″).

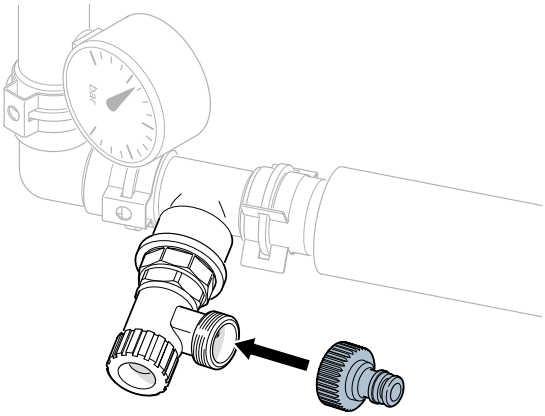

3. Attach a hose with a connector to the tap connector.

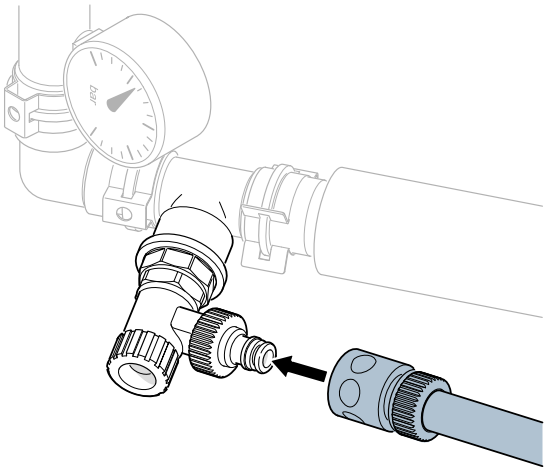

4. Open the drain connection by turning in counter-clockwise.

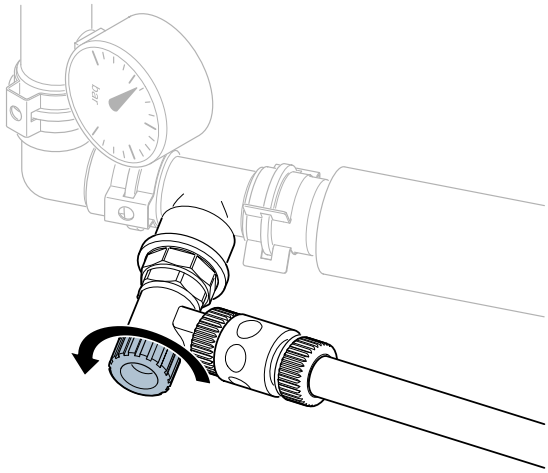

5. Open the bleed valve (QM22) for the accumulator tank.

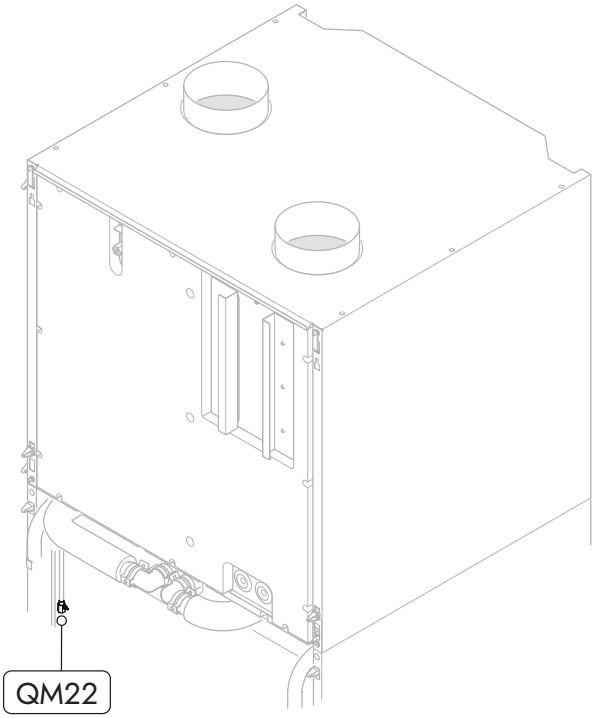

6. Remove the actuator from the diverting valve (QM10).
   a) Pull the quick release lock (1) away from the actuator outlet.
   b) Press the quick release ring (2).

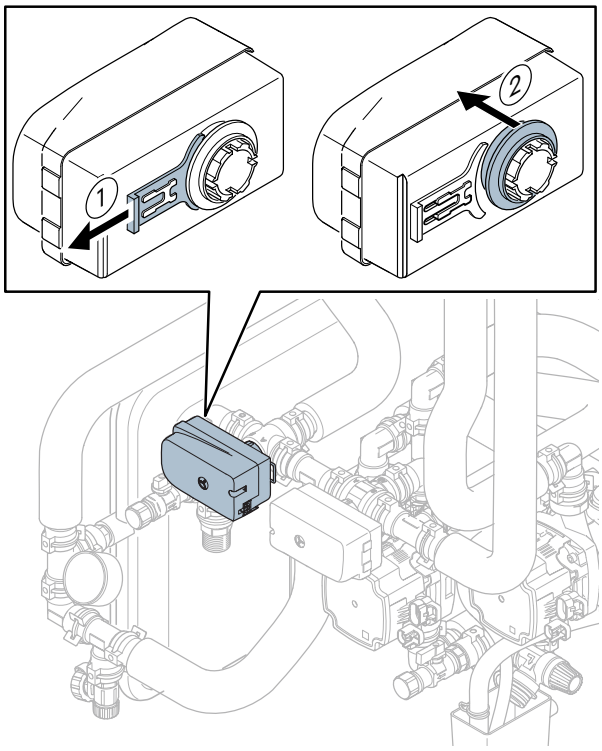

c) Remove the actuator (3).

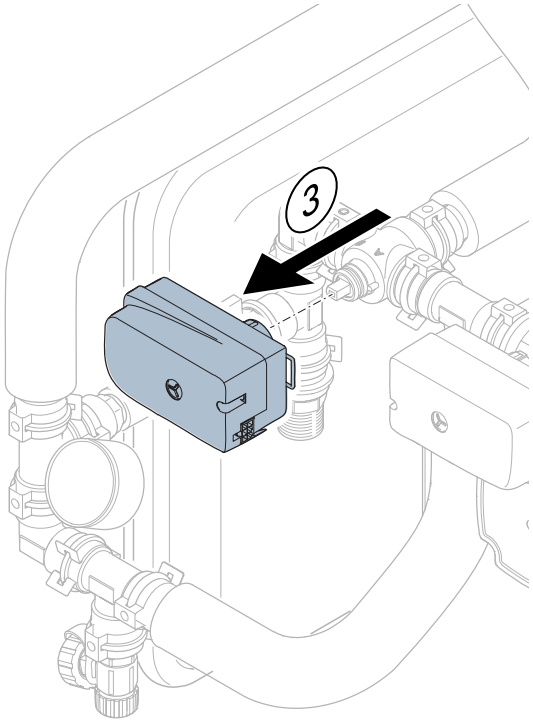

7. Turn the valve axle counter-clockwise (4) until the water starts flowing.

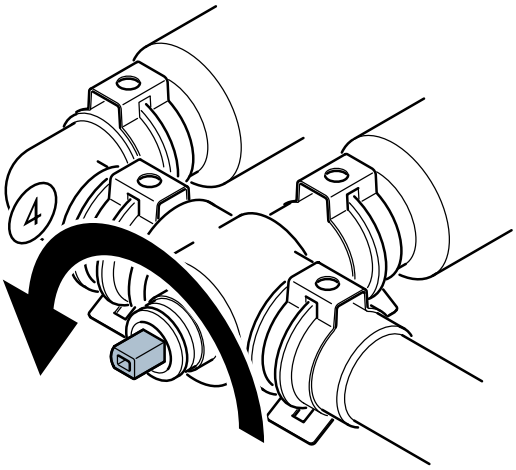

When water stops coming from the hose, restore the product to its original state.

- Close the drain connection
- Close the bleed valve
- Restore the diverting valve axle to the original position
- Reattach the actuator
- Remove the hose connectors
- Reattach the cap.

10 TROUBLESHOOTING

Before troubleshooting

If the system does not inform about an active fault, check the following components before troubleshooting:

WARNING

The incoming supply electricity must be isolated at the safety switch by or under the supervision of a trained electrician in the event that corrective action is needed to address faults that call for work inside screwed hatches.

- Power supply.
- Group and main fuses of the property.
- Residual current device (RCD).
- Internal fuses (*F01—F08*).
- Safety temperature limiter (*FQ10*).

Low room temperature during heating

The room temperature is undesirably low when a heating demand is active

Closed thermostats

- Ensure that the thermostats are fully open. Keep in mind that individual thermostats can be turned down if a certain space needs to be cooler than the set target temperature.

Incorrect operational mode

- If operational mode **Auto** is active, set a higher value for setting **Stop heating temperature**.
- If operational mode **Manual** is active, select **Heating**.
  a) If selecting **Heating** is insufficient, enable setting **Allow addition**.

Too low target settings for automatic heat control

- Set a higher value for the offset heating curve.
  a) If the room temperature is only insufficient in cold weather, increase the **Heating curve** setting with one step.

Away mode is active

- Turn off **Away mode**.

Heating medium pump(s) have stopped

- Check speed settings for circulation pumps.

Air in the distribution system

- Purge the distribution system.

Shut-off valve for heating medium supply is closed

- Open the shut-off valve for heating medium supply.

Allow addition setting is turned off

- Use the Qvantum app and set **Allow addition** to **Yes**.

Too low value set for Allow addition temperature

- Use the Qvantum app and increase the setting for **Allow addition temperature**.

Obstructed filterball valve

- Clean the filterball valve that is connected to the distribution system return line.

Diverting valve in incorrect position

- Check the function of the diverting valve.
- Check the actuator control signal from the main board (UF1).

High room temperature during heating

The room temperature is undesirably high when a heating demand is active

Too high target settings for automatic heat control

- Set a lower value for the offset heating curve.
  a) If the room temperature is only too high in cold weather, decrease the **Heating curve** setting with one step.

Incorrectly positioned indoor temperature sensor

- If an indoor temperature sensor is set as the controlling sensor, ensure that it is positioned so that a correct temperature reading is possible.

Low room temperature during cooling

The room temperature is undesirably low when a cooling demand is active

Too high target settings for automatic cooling control

- Set a higher value for the offset cooling curve.
  a) If the room temperature is only too low in cold weather, increase the **Cooling curve** setting with one step.

Cooling is controlled by external input

- Check external switches.

Insufficient hot water production

Lack of domestic hot water

Hot water demand is temporarily higher than in normal operation

- Temporarily increase the hot water production through setting **Additional hot water.**

Too low target temperature for hot water production

- Through display page **Domestic hot water**, increase the capacity for hot water production.

Faulty pipe installation

- Verify that the pipes for the hot and cold water connections are installed correctly.

The external mixing valve is set too low

- If present, verify that the mixing valve is set correctly.

Increased hot water consumption

- Wait until the domestic hot water reaches a sufficient temperature. The hot water production can be temporarily increased by activating the function **Additional hot water** for hot water capacity.

High room temperature during cooling

The room temperature is undesirably high when a cooling demand is active

Closed thermostats

- If present, ensure that the thermostats are fully open.

Incorrect operational mode

- If operational mode **Auto** is active, set a lower value for setting **Start cooling temperature**.
- If operational mode **Manual** is active, select **Cooling**.
  a) If selecting **Cooling** is insufficient, enable setting **Allow addition**.

Too low target settings for automatic cooling control

- Set a lower value for the offset cooling curve.
  a) If the room temperature is only too high in cold weather, decrease the **Cooling curve** setting with one step.

Away mode is active

- Turn off **Away mode**.

Cooling circulation pump has stopped

- Check speed settings for circulation pump

Insufficient ventilation

The ventilation is insufficient or missing.

Blocked filter

- Clean or replace the filters.

Ventilation set-up not done

- Perform ventilation adjustments.

Reduced air flow at exhaust air valve

- Clean exhaust air device.
- Check adjustments of exhaust air device.

Close ventilation function is active

- Set function **Close ventilation** to **Off**.

Reduced fan speed

- Activate function **Boost ventilation**.

> *NOTE*
>
> Only use the **Boost ventilation** function to temporarily increase air exchange when the ventilation demand is greater than in normal operation.

Abnormal ventilation noise

Blocked filter

- Clean or replace the filters.

Ventilation set-up not done

- Perform ventilation adjustments.

Boost ventilation function is active

- Set function **Boost ventilation** to **Off**.

Low system pressure

Insufficient amount of water in the heating system

1. Purge the distribution system.
2. Refill the water in the distribution system.

Compressor not starting

An alarm is active

- Follow the instructions that are shown on the display or in the Qvantum app.

No comfort demand is active

- Neither heating, cooling or hot water production is requested.

The compressor cannot start because of temperature limitations

- Wait until the heat pump is within its operational temperature range.

Too little time has passed since last compressor start

- Wait until at least 30 minutes has passed.
  a) Check if the compressor has started.

11 TECHNICAL SPECIFICATIONS

Dimensions and installation coordinates

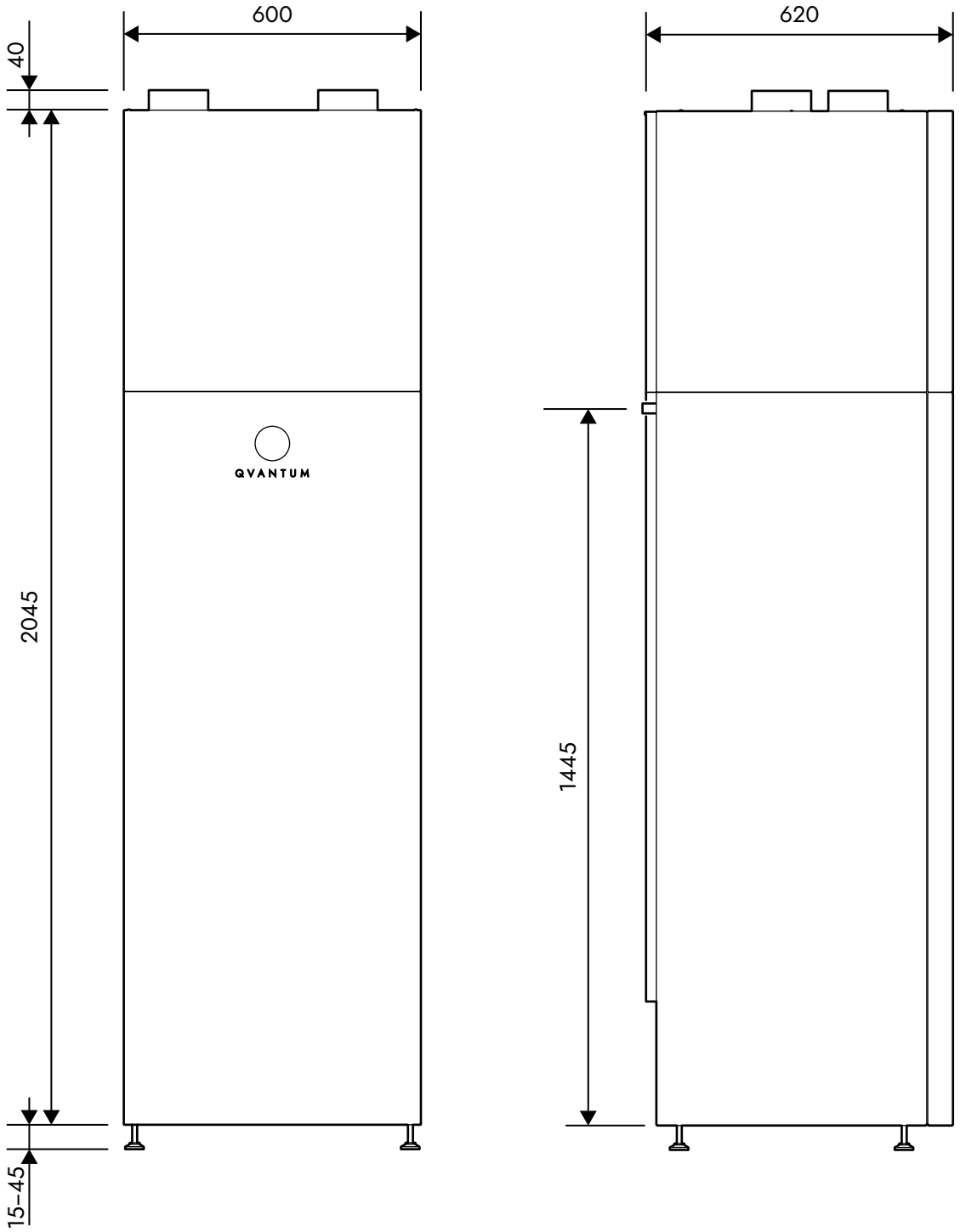

Technical data

MODEL		QE-4	QE-6
Energy efficiency, average climate			
The product's efficiency class room heating, average climate 35 / 55 °C		A+++ / A+++	A++ / A++
The system's efficiency class room heating, average climate 35 / 55 °C		A+++ / A+++	A++ / A++
Efficiency class hot water heating/declared tap profile		A / XL	
ErP output data (EN14825)			
Nominal heating output ($P_{designh}$), cold climate	kW	4	6
Nominal heating output ($P_{designh}$), average climate	kW	4	6
Nominal heating output ($P_{designh}$), warm climate	kW	4	6
SCOP cold climate, 35 °C / 55 °C		5.00 / 4.13	4.25 / 3.60
SCOP average climate, 35 °C / 55 °C		4.68 / 3.88	3.84 / 3.23
SCOP warm climate, 35 °C / 55 °C		4.93 / 4.53	4.15 / 3.50
Refrigerant circuit			
Type of refrigerant (GWP)		R513A (629)	
CO_2 equivalent	kg	755	849
Refrigerant quantity	kg	1.2	1.35
Cut-out value pressostat HP	MPa / bar	2.45 / 24.5	
Heating medium circuit			
Buffer tank volume	l	175	
Opening pressure, safety valve	MPa / bar	0.3 / 3	
Max recommended temperature, supply line	°C	65	
Max pressure, buffer tank	MPa / bar	0.3 / 3	
Max temperature, buffer tank[1]	°C	90	
Minimum flow	l/s	0.08	0.15
Operational range[2]	°C	20 - 80	
Domestic hot water			
Plate heat exchanger volume	l	< 0.8	
Opening pressure, safety valve	MPa / bar	0.9 / 9	
Amount of domestic hot water (40 °C) EN16147[3]	l	235	
Max amount of domestic hot water (40 °C)[4, 3]	l	350	
Ventilation			
Recommended air flow	l/s	25 - 55	40 - 70
Operational range, exhaust air	°C	5 - 35	
Filter class		G3	
Electrical data			
Rated voltage	V	400V 3N ~ 50Hz / 230V 1N ~ 50Hz	
Max power immersion heater	kW	5.0 (1+2+2)	
Recommended fuse, 3x400V / 1x230V	A	16 / 35	
Recommended RCD type		B	
Enclosure class		IP 21	
Operation mode EN60730		1	
Communication			
WLAN, 2.412 – 2.472 GHz max power	dBm	15.46	
Bluetooth, 2.402 – 2.480 GHz max power	dBm	3.02	
Sound data			
Sound power level ($L_{W(A)}$)EN12102	dB(A)	39 - 52	40 - 54
Sound pressure level in installation area ($L_{P(A)}$)	dB(A)	36 - 48	36 - 50
Connection dimensions			
Distribution system, external thread Ø		DN20	
Cold water, external thread Ø		DN20	
Hot water, external thread Ø		DN20	
Ventilation Ø	mm	125	
Weight and dimensions			
Weight, empty / filled	kg	190 / 365	195 / 370
Weight with packaging	kg	201	206
Weight, compressor unit	kg	60	65
W x D x H[5]	mm	600 x 620 x 2045	
Service clearance height	mm	2170	
Misc.			

MODEL		QE-4	QE-6
Part no.		1011073	1011074
Part no. for split delivery		1011618	1011619

1 With internal immersion heater.
2 Max 63 °C without internal immersion heater.
3 At tap flow rate 10 l/min and an incoming cold water temperature of 10 °C.
4 When operating mode Additional hot water is active.
5 Height without ventilation connections and feet.

Cooling data

18°C cooling

The diagrams show a 1:1 ratio between ambient/outside air and exhaust air.

QE-4

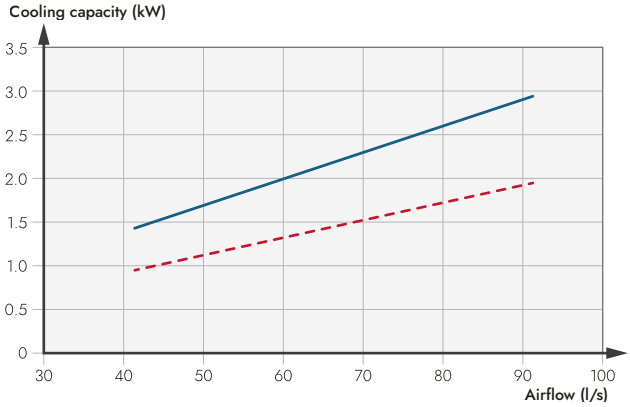

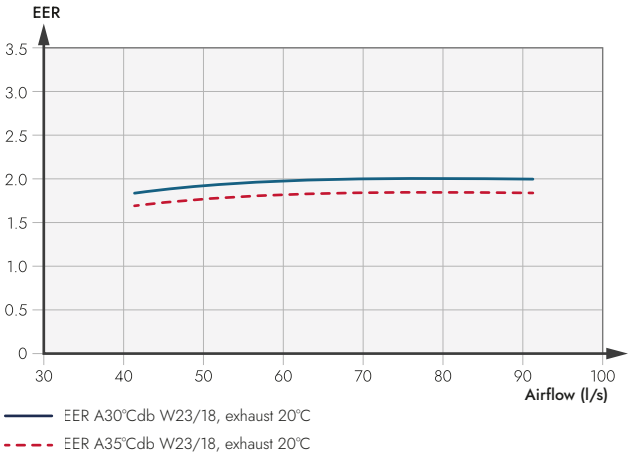

QE-6

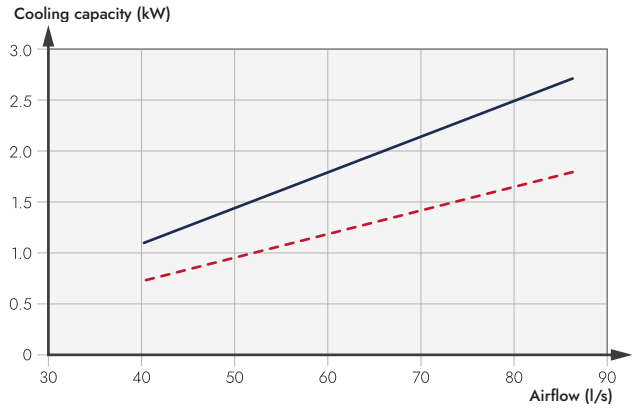

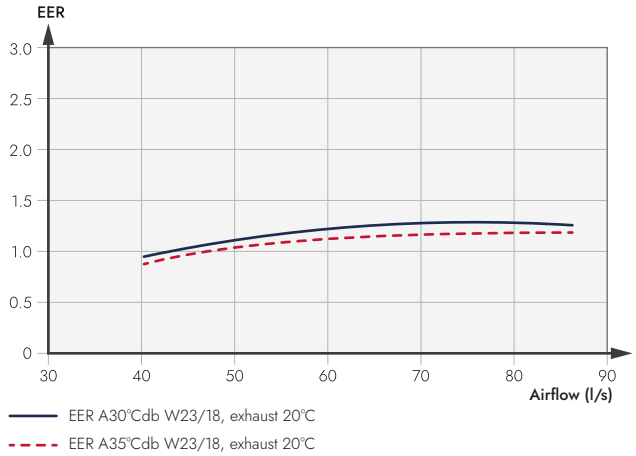

14°C cooling

14°C cooling requires outside air mixture. The diagrams show a 1:1 ratio between ambient/outside air and exhaust air.

QE-4

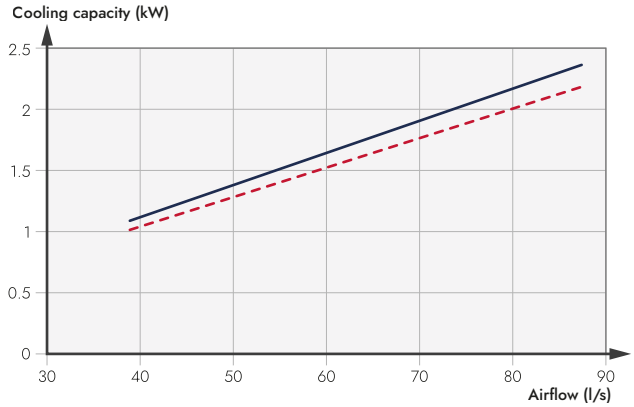

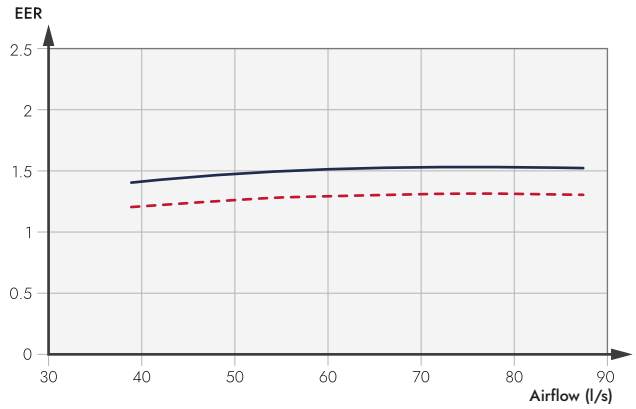

QE-6

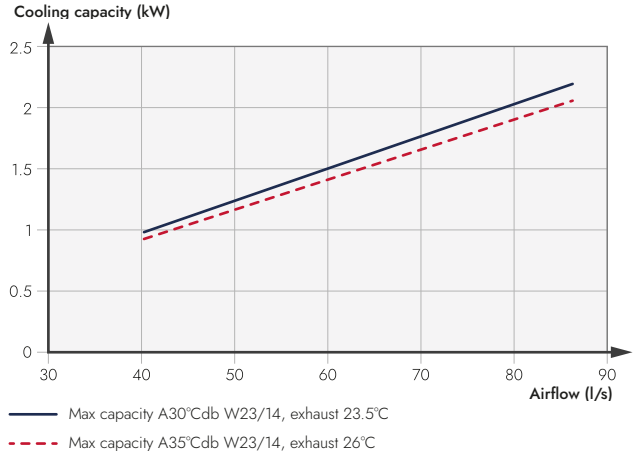

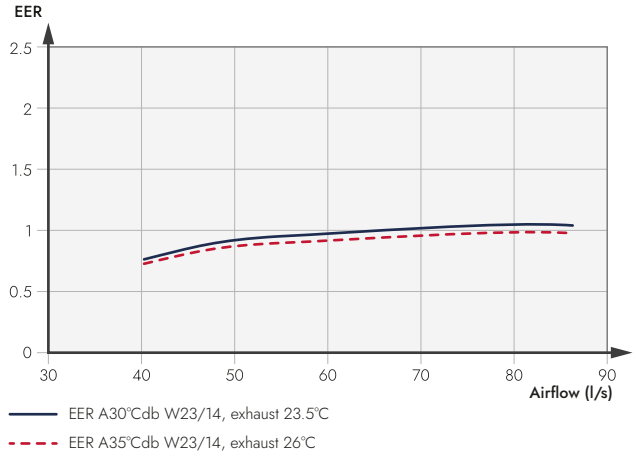

Energy labelling

Data for energy efficiency of the product

SUPPLIER		QVANTUM	QVANTUM
MODEL		**QE-4**	**QE-6**
Temperature application	°C	35 / 55	35 / 55
Declared load profile for water heating		XL	XL
Seasonal space heating energy efficiency class, average climate		A+++ / A+++	A++ / A++
Water heating energy efficiency class, average climate		A	A
Rated heat output ($P_{designh}$), average climate	kW	3.5 / 3.5	5.5 / 5.5
Annual energy consumption space heating, average climate	kWh	1545 / 1867	2958 / 3516
Annual energy consumption water heating, average climate	kWh	1547	1612
Seasonal space heating energy efficiency, average climate	%	184 / 152	151 / 126
Water heating energy efficiency, average climate	%	108	103
Sound power level L_{WA} indoors	dB	39	42
Sound power level L_{WA} outdoors	dB	39	42

Data for energy efficiency of the package

MODEL		QE-4	QE-6
Temperature application	°C	35 / 55	35 / 55
Controller, class[1]		VI	VI
Controller, contribution to efficiency	%	4	4
Seasonal space heating energy efficiency of the package, average climate	%	188 / 156	155 / 130

MODEL		QE-4	QE-6
Seasonal space heating energy efficiency class of the package, average climate		A+++ / A+++	A++ / A++

1 According to ERP directive 2009/125/EC

Technical documentation

QE-4

MODEL		QE-4					
Type of heat pump		☐ Air-water					
		☒ Exhaust-water					
		☐ Brine-water					
		☐ Water-water					
Low-temperature heat pump		☐ Yes ☒ No					
Integrated immersion heater for additional heat		☒ Yes ☐ No					
Heat pump combination heater		☒ Yes ☐ No					
Climate		☒ Average ☐ Cold ☐ Warm					
Temperature application		☒ Medium (55°C) ☐ Low (35°C)					
Applied standards		EN 14825, EN 16147					
Rated heat output	Prated	3.5	kW	*Seasonal space heating energy efficiency*	η_s	152	%
Declared capacity for space heating at part load and at outdoor temperature Tj				*Declared coefficient of performance for space heating at part load and at outdoor temperature Tj*			
Tj = -7 °C	Pdh	3.2	kW	Tj = -7 °C	COPd	2.51	-
Tj = +2 °C	Pdh	2.0	kW	Tj = +2 °C	COPd	3.91	-
Tj = +7 °C	Pdh	1.2	kW	Tj = +7 °C	COPd	4.74	-
Tj = +12 °C	Pdh	0.9	kW	Tj = +12 °C	COPd	5.18	-
Tj = biv	Pdh	3.6	kW	Tj = biv	COPd	2.15	-
Tj = TOL	Pdh	3.6	kW	Tj = TOL	COPd	2.15	-
Tj = -15 °C (if TOL < -20 °C)	Pdh		kW	Tj = -15 °C (if TOL < -20 °C)	COPd		-
Bivalent temperature	T_{biv}	-10	°C	Min. outdoor air temperature	TOL	-10	°C
Cycling interval capacity	Pcych		kW	Cycling interval efficiency	COPcyc		-
Degradation coefficient	Cdh	0.98	-	Max supply temperature	WTOL	58	°C
Power consumption in modes other than active mode				*Additional heat*			
Off mode	P_{OFF}	0.002	kW	Rated heat output	Psup	0.0	kW
Thermostat-off mode	P_{TO}	0.005	kW				
Standby mode	P_{SB}	0.005	kW	Type of energy input	Electric		
Crankcase heater mode	P_{CK}	0.00	kW				
Other items							
Capacity control	Variable			Rated air flow (air-water)		190	m^3/h
Sound power level, indoors/outdoors	L_{WA}	39/39	dB	Nominal heating medium flow			m^3/h
Annual energy consumption	Q_{HE}	1867	kWh	Brine flow (brine-water or water-water heat pumps)			m^3/h
For heat pump combination heater							
Declared load profile for water heating	XL			*Water heating energy efficiency*	η_{wh}	108	%
Daily energy consumption	Q_{elec}	7.60	kWh	Daily fuel consumption	Q_{fuel}		kWh
Annual energy consumption	AEC	1547	kWh	Annual fuel consumption	AFC		GJ
Contact information	*Qvantum Energi AB - Ji-te gatan 7 - 265 38 Åstorp - Sweden*						

QE-6

MODEL		QE-6					
Type of heat pump		☐ Air-water					
		☒ Exhaust-water					
		☐ Brine-water					
		☐ Water-water					
Low-temperature heat pump		☐ Yes ☒ No					
Integrated immersion heater for additional heat		☒ Yes ☐ No					
Heat pump combination heater		☒ Yes ☐ No					
Climate		☒ Average ☐ Cold ☐ Warm					
Temperature application		☒ Medium (55°C) ☐ Low (35°C)					
Applied standards		EN 14825, EN 16147					
Rated heat output	Prated	5.5	kW	*Seasonal space heating energy efficiency*	η_s	126	%
Declared capacity for space heating at part load and at outdoor temperature Tj				*Declared coefficient of performance for space heating at part load and at outdoor temperature Tj*			
Tj = -7 °C	Pdh	4.8	kW	Tj = -7 °C	COPd	2.04	-
Tj = +2 °C	Pdh	2.9	kW	Tj = +2 °C	COPd	3.23	-
Tj = +7 °C	Pdh	1.9	kW	Tj = +7 °C	COPd	4.48	-
Tj = +12 °C	Pdh	1.6	kW	Tj = +12 °C	COPd	5.72	-
Tj = biv	Pdh	5.4	kW	Tj = biv	COPd	1.75	-
Tj = TOL	Pdh	5.4	kW	Tj = TOL	COPd	1.75	-
Tj = -15 °C (if TOL < -20 °C)	Pdh		kW	Tj = -15 °C (if TOL < -20 °C)	COPd		-
Bivalent temperature	T_{biv}	-10	°C	Min. outdoor air temperature	TOL	-10	°C
Cycling interval capacity	Pcych		kW	Cycling interval efficiency	COPcyc		-
Degradation coefficient	Cdh	0.98	-	Max supply temperature	WTOL	58	°C
Power consumption in modes other than active mode				*Additional heat*			
Off mode	P_{OFF}	0.002	kW	Rated heat output	Psup	0.0	kW
Thermostat-off mode	P_{TO}	0.005	kW				
Standby mode	P_{SB}	0.005	kW	Type of energy input	Electric		
Crankcase heater mode	P_{CK}	0.00	kW				
Other items							
Capacity control	Variable			Rated air flow (air-water)		235	m^3/h
Sound power level, indoors/outdoors	L_{WA}	42/42	dB	Nominal heating medium flow			m^3/h
Annual energy consumption	Q_{HE}	3516	kWh	Brine flow (brine-water or water-water heat pumps)			m^3/h
For heat pump combination heater							
Declared load profile for water heating	XL			*Water heating energy efficiency*	η_{wh}	103	%
Daily energy consumption	Q_{elec}	8.03	kWh	Daily fuel consumption	Q_{fuel}		kWh
Annual energy consumption	AEC	1612	kWh	Annual fuel consumption	AFC		GJ
Contact information	*Qvantum Energi AB - Ji-te gatan 7 - 265 38 Åstorp - Sweden*						

Index

A

Accessories 8

B

Before installing
- Transport 7

C

Components
- Compressor unit 10
- Electrical box 11
  - Fuses 18
- Hydronic unit connections 10
- Overview 10

E

Electrical connections 19
- 1x230V 19
- 3x400V 20
- Power connection 19
- Sensors 20
  - Indoor temperature sensor 21
  - Outdoor temperature sensor 20

Electrical installation 18
- Access
  - Electrical box 18
- Safety temperature limiter 23

Environmental information 6

F

Front cover removal 8
- Disconnecting the display unit 9

I

Important information
- Environmental information 6
- Product labels 5
- Safety 4
- Serial number 5

Installation area 7
- Setup dimensions 7

O

Operating principle 12
Outside air mixture 16

P

Pipe connections 13
- Measurements and dimensions 13

Pipe installation 12
- Cold and domestic hot water 14
- Distribution system 13

S

Safety temperature limiter 23
Scheduler 31
Setup dimensions 7
Shutting down the unit 34
Supplied components 8
System volume 13

T

Technical specifications 42
- Dimensions and installation coordinates 42
- Energy labelling 45
- Technical data 43

Troubleshooting 40
- Before troubleshooting 40

U

User interface
- Settings
  - Service functions 32

V

Ventilation installation 16
- Exhaust air 16
- Extract air 16
- Measurements and dimensions 16
- Ventilation flow and adjustments 26

QCH EN 2614-B

1014076

This publication presents information that was valid at the time of publishing.
Qvantum reserves the right to make changes without prior notification.
Subject to possible printing errors.
©2026 Qvantum Energi AB

HEAT PUMPS FOR SUSTAINABLE CITIES

WE CHANGE THE WAY THE CITIES OF EUROPE ARE HEATED

Qvantum, founded in Sweden in 1993, develops high-quality heat pumps for individual buildings and innovative heat pump-based solutions for densely populated areas to enable everybody to benefit from emission free heating and cooling. The company has deep knowledge in both heat pump technology and energy systems engineering and works in close collaboration with engineering consultants, installers, project developers and utilities.

Qvantum Energi AB
Ji-te gatan 7, 265 38 Åstorp – Sweden | qvantum.com

QVANTUM